Technical Data

Original Instructions

Allen-Bradley by ROCKWELL AUTOMATION

Guardmaster®

Safety Switches Specifications

Bulletin Numbers 440G, 440H, 440K, 440P, 440N, 440T, and 442G

Rockwell Automation

Introduction

Safety switches are used to safeguard hazardous areas. We provide a number of different safety switch configurations. This document describes guard locking, hinge, and interlock switches.

Guard locking switches are used to help protect an area when a danger is not immediately removed after a stop request, as in the case of high-inertia rotating machines, fast rotating machines, and machines where high pressure must be released from pneumatic valves.

Hinge switches, when triggered, close specific normally open (accessible) doors or guards.

Interlock switches monitor the position of a guard or gate. They can be used to shut off power, control personnel access, and help prevent a machine from starting when the guard is open.

Summary of Changes

This publication contains the following new or updated information. This list includes substantive updates only and is not intended to reflect all changes.

Topic	Page
Updated Table 74 and Table 75	128
Updated Table 78	144
Updated Table 79	145
Updated Table 80	146
Updated Table 81	150
Updated Table 82	152
Updated Table 83	156
Updated Table 84	159
Updated Table 85	160
Updated Product Selection (3/8 sq shaft)	164

440G-MZ Guard Locking Switches

The 440G-MZ guard locking switches have the following features:

- Certified to SIL 3, PLe, Cat 4 for door position monitoring and guard locking
- Embedded GuardLink® technology
- Type 4 interlocking device with guard locking per ISO 14119 with low or high coded RFID actuators
- High holding force of 2500 N
- Flexible actuator
- ±5 mm (0.2 in.) misalignment tolerance
- Energy-efficient bi-stable solenoid
- IP69K
- Power to Release and Power to Lock models
- DEVICE and LINK status is provided by two bright 270° status indicators

Specifications

Attribute	440G-MZ Guard Locking Switches
Standards	IEC 60947-5-3, IEC 61508, ISO 13849-1, IEC 62061, ISO 14119, UL 508
Safety classification	Type 4 interlocking device with guard locking per ISO 14119 with low (standard) and high (unique) coding per ISO 14119 Suitable for use in applications up to and including PLe Cat 4 per ISO 13849-1, SIL CL 3 per IEC 62061, and SIL 3 per IEC 61508
Functional safety data	See the Guardmaster Guard Locking Switch User Manual, publication 440G-UM004
Certifications	CE Marked for all applicable EU directives, cULus Listed, TÜV Certified, UKCA Marked for all applicable regulations rok.auto/certifications
Operating Characteristics	
Torque for M5 mounting of switch and actuator mounting bracket, max [N•m (lb•in)]	2 (17.7)
Torque, auxiliary release access screw (escape release model) [N•m (lb•in)]	0.56 (5)
Locking bolt alignment tolerance X, Y, Z, max [mm (in.)]	± 5 (0.2)
Holding force F_{max} (ISO 14119)	3250 N
Holding force F_{zh} (ISO 14119)	2500 N
Output current, max (each output)	200 mA
Quiescent power consumption, locked or unlocked	1.5 W
Lock signal current	1 mA
Peak current and duration, at turn on or after lock/unlock operation	150 mA for approximately 800 ms following lock/unlock operation.
Steady state current, max	• OSSD mode: 40 mA • GuardLink mode: 50 mA
Operating voltage Ue	24V DC +10% / -15% Class 2 PELV
Operating cycle frequency, max	0.2 Hz
Dwell time between subsequent locking/unlocking	2.5 s
Response time (Off) (IEC 60947-5-3)	275 ms

Attribute	440G-MZ Guard Locking Switches	
Startup time (availability)	8 s	
Utilization category (IEC 60947-5-2)	DC-13 24V 200 mA	
Insulation voltage (U_i) (IEC 60947-5-1)	75V	
Impulse withstand voltage (U_{imp}) (IEC 60947-5-1)	1 kV	
Pollution degree (IEC 60947-5-1)	3	
Auxiliary release	Built-in	
Escape release	Built-in (select models)	
Protection class (IEC 61140)	Class II	
Mechanical life	500,000 cycles	
Outputs (Guard door is closed and locked)		
Safety outputs	2 x PNP, 0.2 A max / ON (+24V DC)	
Environmental		
Operating temperature [°C (°F)]	0...55 (32...131)	
Storage temperature [°C (°F)]	-25...+75 (-13...+167)	
Operating humidity	5...95%, noncondensing	
Enclosure ingress rating	IP65, IP66, IP67, IP69, and IP69K	
Shock and vibration	• IEC 60068-2-27, 30 g, 11 ms • IEC 60068-2-6, 10...55 Hz, 1 mm (0.4 in.)	
Radio frequency/EMC	IEC 60947-5-3, FCC-1 (Parts 18 and 15), RED	
General		
Materials	Switch	• Housing: ABS • Front brace: SS304 (machined); SS316 (cast)
	Actuator	• Housing and housing cover: SS304 • Spring: SS302 • Grommet: Nitrile rubber • Screws: Stainless steel • Tongue: SS410
	Brackets	High-strength low-alloy steel
	Accessories	• Padlock: SS410 • Button: Aluminum, powder painted • Auxiliary release tool: SS304 with SS201 key ring • Screw: steel

Attribute	440G-MZ Guard Locking Switches	
Weight	Switch	0.75 kg (1.7 lb)
	Actuator	0.27 kg (0.6 lb)
	Brackets	• Actuator L: 0.27 kg (0.6 lb); • Actuator Z: 0.54 kg (1.2 lb) • Switch L: 1 kg (2.2 lb)
Protection Type	Short-circuit, current limitation, overload, reverse polarity, overvoltage (up to 60V max), thermal shutdown/restart	

Product Selection

Table 1 - Catalog Number Explanation

440G-MZS	20	S	N	R	J	E
	a	b	c	d	e	f

a	
Outputs (Safety/Auxiliary)	
Code	Description
20	Two safety/no aux

b	
Actuator Code	
Code	Description
S	Standard code
U	Unique code

c	
Auxiliary Type	
Code	Description
N	No auxiliary

d	
Lock Type	
Code	Description
R	Power to Release
L	Power to Lock

e	
Connection Type	
Code	Description
J	M12 5-pin

f	
Special Features	
Code	Description
Blank	None
E	Escape release

Table 2 - Complete Switches, Including Switch Body and Actuator

Type	Actuator Coding	Escape Release	Cat No.
Power to Release	Standard (Low level to ISO 14119)	No	440G-MZS20SNRJ
	Unique (High level to ISO 14119)		440G-MZS20UNRJ
Power to Lock	Standard (Low level to ISO 14119)		440G-MZS20SNLJ
	Unique (High level to ISO 14119)		440G-MZS20UNLJ
Power to Release	Standard (Low level to ISO 14119)	Yes	440G-MZS20SNRJE
	Unique (High level to ISO 14119)		440G-MZS20UNRJE
Power to Lock	Standard (Low level to ISO 14119)		440G-MZS20SNLJE
	Unique (High level to ISO 14119)		440G-MZS20UNLJE

Accessories

Table 3 - Spare Actuators

Description	Cat. No.
Standard code actuator (Low level to ISO 14119)	440G-MZAS
Unique code actuator (High level to ISO 14119)	440G-MZAU

Table 4 - Accessories

Description			Cat. No.
	Actuator mounting bracket	L-shaped	440G-MZAM1
		Z-shaped	440G-MZAM2
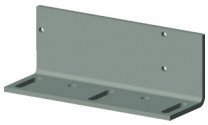	Switch mounting bracket		440G-MZAM3
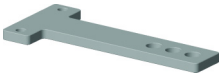	Padlock accessory		440G-MZAL
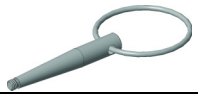	Auxiliary release tool		440G-MZAT
	Replacement screw		440G-MZRSC
	Replacement button		440G-MZRBU

Approximate Dimensions

Figure 1 - Switch Body [mm (in.)]

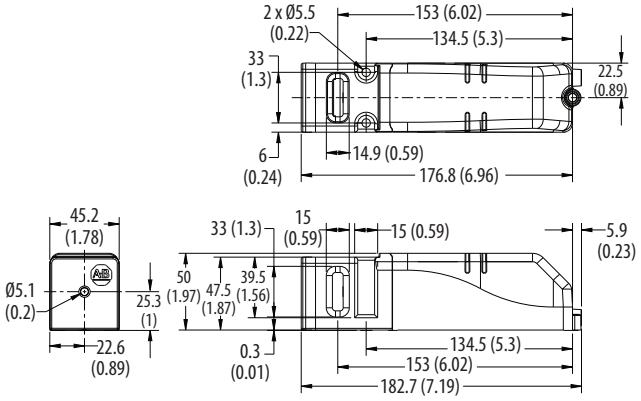

Figure 2 - Actuator [mm (in.)]

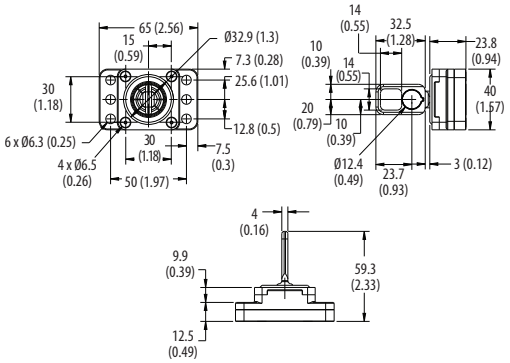

Pin Assignment

Table 5 - 5-pin Micro (M12)

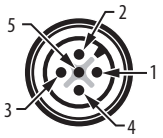

Pin	Color	Function	
		OSSD Mode	GuardLink Mode
1	Brown	+24V	+24V
2	White	Safety A	Safety In
3	Blue	0V	0V
4	Black	Safety B	Safety out
5	Gray	Lock command	Command, Lock, and Unlock (CLU)

Recommended 5-pin cordset: 889D-F5AC-x
x = 2 [2 m (6.6 ft)], 5 [5 m (16.4 ft)], or 10 [10 m (32.8 ft)] for standard cable lengths.
Recommended patchcord for use with ArmorBlock® Guard I/O™: 889D-F5ACDM-x
x = 0M3 [0M3 (0.98 ft)], 1 [1 m (3.3 ft)], 2 (2 m [6.6 ft]) recommended, 5 [5 m (16.4 ft)], or 10 [10 m (32.8 ft)] for standard cable lengths.

Connection in a GuardLink System

The 440G-MZ safety switch can be connected to a GuardLink system via a passive tap (catalog number 440S-PF5D shown in Figure 3) or a passive power tap (catalog number 440S-PF5D4).

Figure 3 - Connect 440G-MZ Switch to a GuardLink System with a Passive Tap

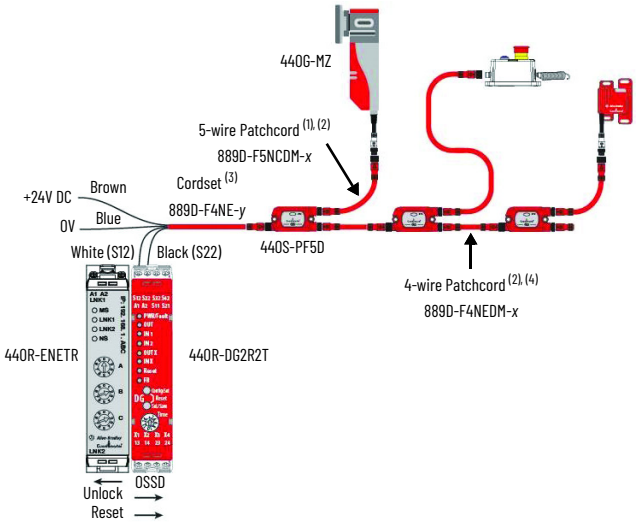

(1) 10 m (32.8 ft) length, max
(2) *x* = 0M3 (300 mm [0.98 ft]), 0M6 (600 mm [1.97 ft]), 1 (1 m [3.3 ft]), 2 (2 m [6.6 ft]), 5 (5 m [16.4 ft]), or 10 (10 m [32.8 ft]) for standard cable lengths.
(3) *y* = 2 (2 m [6.6 ft]), 5 (5 m [16.4 ft]), 10 (10 m [32.8 ft]), 15 (15 m [49.2 ft]), 20 (20 m [65.6 ft]), or 30 (30 m [98.4 ft]) for standard cable lengths.
(4) 30 m (98.4 ft) length, max

440G-LZ Guard Locking Switches

The 440G-LZ guard locking switches have the following features:

- Certified to PLe to ISO 13849-1 (both for door position and lock monitoring to ISO 14119)
- Solid-state design and monitored outputs
- Type 4 interlocking device with guard locking per ISO 14119 with low or high coded RFID actuators
- High holding force of 1300 N
- Energy-efficient green device that only uses 2.5 W
- IP69k and hygienic design
- Power to Release and Power to Lock versions
- Auxiliary output versions: lock status or guard proximity
- Compact design that is optimized for ease of mounting
- Diagnostic information provided by two bright 270° status indicators
- Solid-state OSSD outputs series connectible to ISO 14119

Specifications

Attribute	440G-LZ Guard Locking Switches
Safety Ratings	
Standards	ISO 14119, IEC 60947-5-3, ISO 13849-1, IEC 62061
Safety classification	Type 4 interlocking device with guard locking per ISO 14119 with low (standard) and high (unique) coding per ISO 14119 PLe Cat 4 per ISO 13849-1 and SIL 3 per IEC 62061
Functional safety	See Rockwell Automation Functional Safety Data Sheet, publication SAFETY-SR001
Certifications	CE Marked for all applicable EU directives, cULus Listed, TÜV Certified, UKCA Marked for all applicable regulations rok.auto/certifications
Operating Characteristics	
Torque for M5 mounting of switch and actuator mounting bracket, max [N•m (lb•in)]	2 (17.7)
Locking bolt insertion for assured locking and holding force [mm (in.)]	Min of 5 (0.19), max of 10 (0.39)
Locking bolt alignment tolerance X, Y, Z [mm (in.)]	Max of ±2.5 (0.09)
Holding force Fmax (ISO 14119)	1690 N
Holding force Fzh (ISO 14119)	1300 N
Output current, max (each output)	200 mA
Quiescent power consumption, locked or unlocked	2.5 W
Peak current and duration, at turn on or after lock/unlock operation	400 mA / 100 ms
Operating voltage Ue	24V DC +10% / -15% Class 2 SELV
Frequency of operating cycles, max	0.2 Hz
Dwell time between subsequent locking/ unlocking	2.5 s
Response time (off)	100 ms first switch, 50 ms additional for each switch
Risk time (according to IEC 60947-5-3)	100 ms

Attribute	440G-LZ Guard Locking Switches
Startup time (availability)	8 s
Length of a chain of switches, max	10 km (6.2 mi) Dependent on cable/connection/required response time
Utilization category (IEC 60947-5-2)	DC-13 24V 200 mA
Insulation voltage (U_i) (IEC 60947-1)	75V
Impulse withstand voltage (U_{imp}) (IEC 60947-1)	1 kV
Pollution degree (IEC 60947-1)	3
Manual (auxiliary) release	Built in
Protection class (IEC 61140)	Class II
Mechanical life	500,000 cycles
Outputs (guard door is closed and locked)	
Safety outputs	2 x PNP, 0.2 A max / ON (+24V DC)
Auxiliary outputs	1 x PNP, 0.2 A max / OFF (0V DC)
Environmental	
Operating temperature [°C (°F)]	0...55 (14...131)
Storage temperature [°C (°F)]	-25...+75 (-13...+167)
Operating humidity	5...95% relative
Enclosure ingress rating	NEMA 3, 4X, 12, 13, IP66, IP67, IP69k
Shock and vibration	IEC 60068-2-27 30 g, 11 ms/IEC 60068-2-6 10...55 Hz, 1 mm (0.04 in.)
Hygienic	ISO 14159:2004 and EN 1672-2005 (for that part of the machine that is defined as the food splash area)
Washdown	Sodium Hydroxide based washdown fluids
Radio frequency / EMC	IEC 60947-5-3, FCC-1 (Parts 18 and 15), RandTTE
General	
Materials	ABS, locking bolt and mounting bracket 304 stainless steel
Weight	Switch 400 g (0.9 lb), actuator 150 g (0.3 lb), actuator mounting bracket 60 g (0.1 lb)
Protection Type	Short-circuit, current limitation, overload, reverse polarity, overvoltage (up to 60V max), thermal shutdown/restart

Product Selection

Locking Type	Actuator Type	Cat. No.					
		Connector Type					
		Aux. Output = Lock Aux.			Aux. Output = Door Aux.		
		3 m (9.8 ft) Lead	10 m (32.8 ft) Lead	6 in. (152.4 mm) Pigtail with M12 8-pin QD	3 m (9.8 ft) Lead	10 m (32.8 ft) Lead	6 in. (152.4 mm) Pigtail with M12 8-pin QD
Power to Release	Standard (low level to ISO 14119)	440G-LZS21SPRA	440G-LZS21SPRB	440G-LZS21SPRH	440G-LZS21STRA	440G-LZS21STRB	440G-LZS21STRH
	Unique (high level to ISO 14119)	440G-LZS21UPRA	440G-LZS21UPRB	440G-LZS21UPRH	440G-LZS21UTRA	440G-LZS21UTRB	440G-LZS21UTRH
Power to Lock	Standard (low level to ISO 14119)	440G-LZS21SPLA	440G-LZS21SPLB	440G-LZS21SPLH	440G-LZS21STLA	440G-LZS21STLB	440G-LZS21STLH
	Unique (high level to ISO 14119)	440G-LZS21UPLA	440G-LZS21UPLB	440G-LZS21UPLH	440G-LZS21UTLA	440G-LZS21UTLB	440G-LZS21UTLH

Accessories

Table 6 - Spare Actuators

Locking Type	Actuator Type	Cat. No.
Power to Release	Standard (low-level ISO 14119)	440G-LZASPR
	Unique (high-level ISO 14119)	440G-LZAUPR
Power to Lock	Standard (low-level ISO 14119)	440G-LZASPL
	Unique (high-level ISO 14119)	440G-LZAUPL

Table 7 - Mounting Brackets

Description	Cat. No.
Actuator mounting bracket	440G-LZAM1
Switch body mounting bracket	440G-LZAM2

Approximate Dimensions

Figure 4 - Switch Body [mm (in.)]

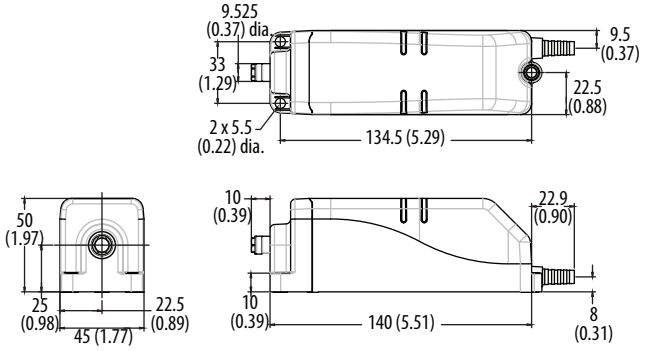

Figure 5 - Actuator and Actuator Mounting Bracket (440G-LZAM1) [mm (in.)]

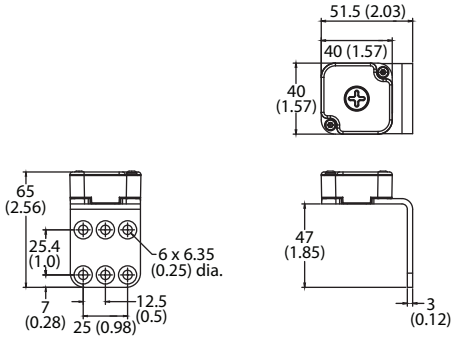

Figure 6 - Switch Mounting Bracket (440G-LZAM2) [mm (in.)]

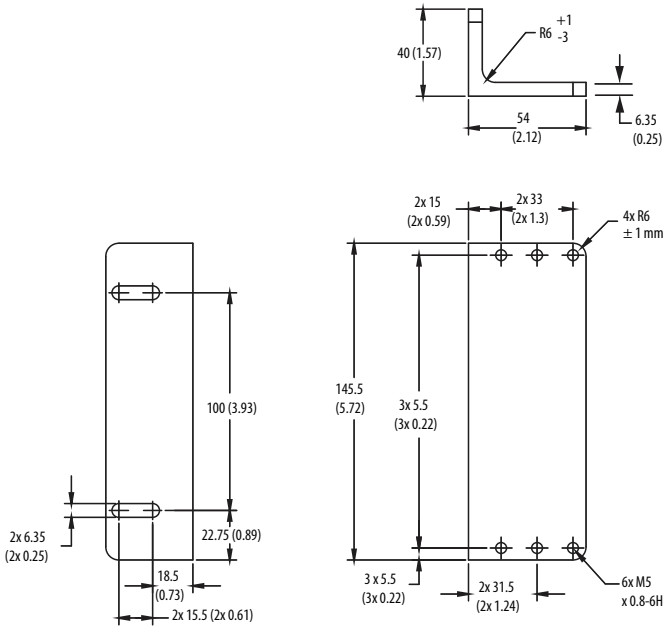

Typical Wiring Diagrams

Table 8 - 8-pin Micro (M12)

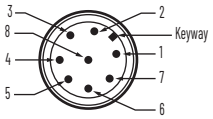

Pin	Color	Function
1	White	Aux
2	Brown	24V DC +
3	Green	Lock
4	Yellow	Safety B+
5	Gray	Safety A
6	Pink	Safety B
7	Blue	Gnd/0V
8	Red	Safety A+

Recommended 8-pin cordset: 889D-F8AB-x
x = 2 [2 m (6.6 ft)], 5 [5 m (16.4 ft)] or 10 [10 m (32.8 ft)] for standard cable lengths.

TLS-Z GD2 Guard Locking Switches

The TLS-ZR GD2 and the TLS-ZL GD2 guard locking switches have the following features:

- Meets PLe to ISO 13849-1
- Solid-state OSSD outputs series connectible to ISO 14119
- RFID uniquely coded door target
- Easy QD connection
- Same mechanical arrangement as standard TLS-GD2
- High locking force ≤ 2000 N (450 lbf)

Specifications

Attribute	TLS-Z GD2 Guard Locking Switches	
Safety Ratings		
Standards	ISO 14119, IEC 60947-5-3, ISO 13849-1	
Safety classification	Type 4 interlocking device with guard locking per ISO 14119 with high (unique) coding per ISO 14119 PLe Cat 4 per ISO 13849-1	
Functional safety	See Rockwell Automation Functional Safety Data Sheet, publication SAFETY-SR001	
Certifications	CE Marked for all applicable EU directives, cULus Listed, TÜV Certified, UKCA Marked for all applicable regulations rok.auto/certifications	
Outputs (Guard Door is Closed and Locked)		
Safety outputs	2 x PNP, 0.2 A max, status: ON (+24V DC)	
Auxiliary outputs	1 x PNP, 0.2 A max, status: OFF (0V DC)	
Operating Characteristics		
TLSZR-GD2	Power to Release	
TLSZL-GD2	Power to Lock	
Assured locking distance [mm (in.)]	• Door target distance, max: 13 (0.51) • Clearance between actuator base and switch in door-closed position, max: 5 (0.2)	
Torque for M5 mounting [N•m (lb•in)]	1.4 (12.39)	
Torque for cover mounting [N•m (lb•in)]	1.2 (10.62)	
Holding force F_{max} (ISO 14119)	• Plastic pins: 1950 N (488 lbf) • Steel bolts: 2600 N (585 lbf)	
Holding force F_{zh} (ISO 14119)	• Plastic pins: 1500 N (337 lbf) • Steel bolts: 2000 N (450 lbf)	
Output current, max (all outputs)	200 mA	
Current consumption	50 mA — Solenoid not energized (no load supply current); 120 mA (260 mA inrush) — Solenoid energized (no load supply current); <0.5 mA DC — Off state	
Solenoid duty cycle	Series E and earlier	100%
	Series F and later	33%
Number of switches (connected in series), max	Unlimited	
Operating voltage Ue	24V DC +10%/-15% Class 2	
Operating frequency	1 Hz	
Actuation speed, max [mm/s (in/s)]	160 (6.29)	
Actuation speed, min [mm/min (in/min)]	100 (3.94)	

Attribute	TLS-Z GD2 Guard Locking Switches	
Response time (Off)	Series E and earlier	75 ms first switch, 25 ms each additional switch
	Series F and later	45 ms first switch, 10 ms each additional switch
Utilization category	DC-13 24V 200 mA (IEC 60947-5-2)	
Rated impulse withstand voltage	250V	
Pollution degree	3	
Protection Type	2	
Mechanical life	1,000,000 operations	
Actuation speed, max [mm/s (in/s)]	160 (6.29)	
Operating radius (only for use with flexible actuator) [mm (in)]	80 (3.15)	
Environmental		
Enclosure type rating	NEMA 3, 4X, 12, 13; IP66, IP69K	
Operating temperature [°C (°F)]	-10...+60 (14...140)	
Relative humidity	5...95%	
Shock and vibration	IEC 60068-2-27 30 g, 11 ms/IEC 60068-2-6 10...55 Hz, 1 mm (0.04 in.)	
Frequency	IEC 61000-4-3, IEC 61000-4-6	
Physical Characteristics		
Material	• Housing: UL Approved glass-filled PBT • Actuator: Stainless steel	
Target type	UL Approved glass-filled PBT	
Weight	400 g (0.88 lb)	
Color	Red	

Product Selection

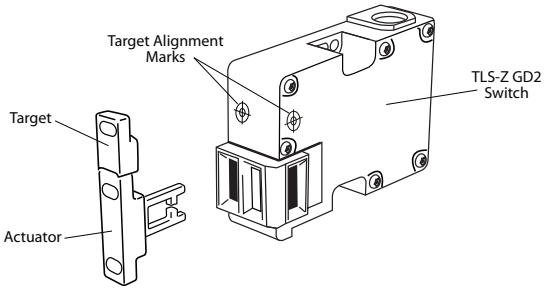

Locking Type	Actuator Type	Connector Type	Cat. No.	
			Aux. Output = Lock Aux.	Aux. Output = Door Aux.
Power to Release	Unique (high level to ISO 14119)	8-in. pigtail with M12 8-pin QD	440G-TZS21UPRH	440G-TZS21UTRH
Power to Lock			440G-TZS21UPLH	440G-TZS21UTLH

Accessories

Description		Cat. No.
	Spare RFID door target for series E and earlier	440G-ATZA
	Spare RFID door target for series F and later	440G-ATZAF
	Fully flexible actuator	440G-A27143
	Cover for TLS-1 with external override key for series E and later	440G-A27371
	Cover for TLS-1 with override key that is attached for series E and later	440G-A27373

Description		Cat No.
	Emergency override key (See the following Attention)	440G-A36026
	Flexible release—1 m (3.3 ft) cable	440G-A27356 (1)
	Flexible release—3 m (9.8 ft) cable	440G-A27357 (1)
	Dust cover	440K-A17183

(1) Flexible release cannot be used with Power to Lock switches.

ATTENTION: Do not attach the emergency override key to the TLS-Z-GD2 switch.

Approximate Dimensions

Figure 7 - Guard Locking Switch [mm (in.)]

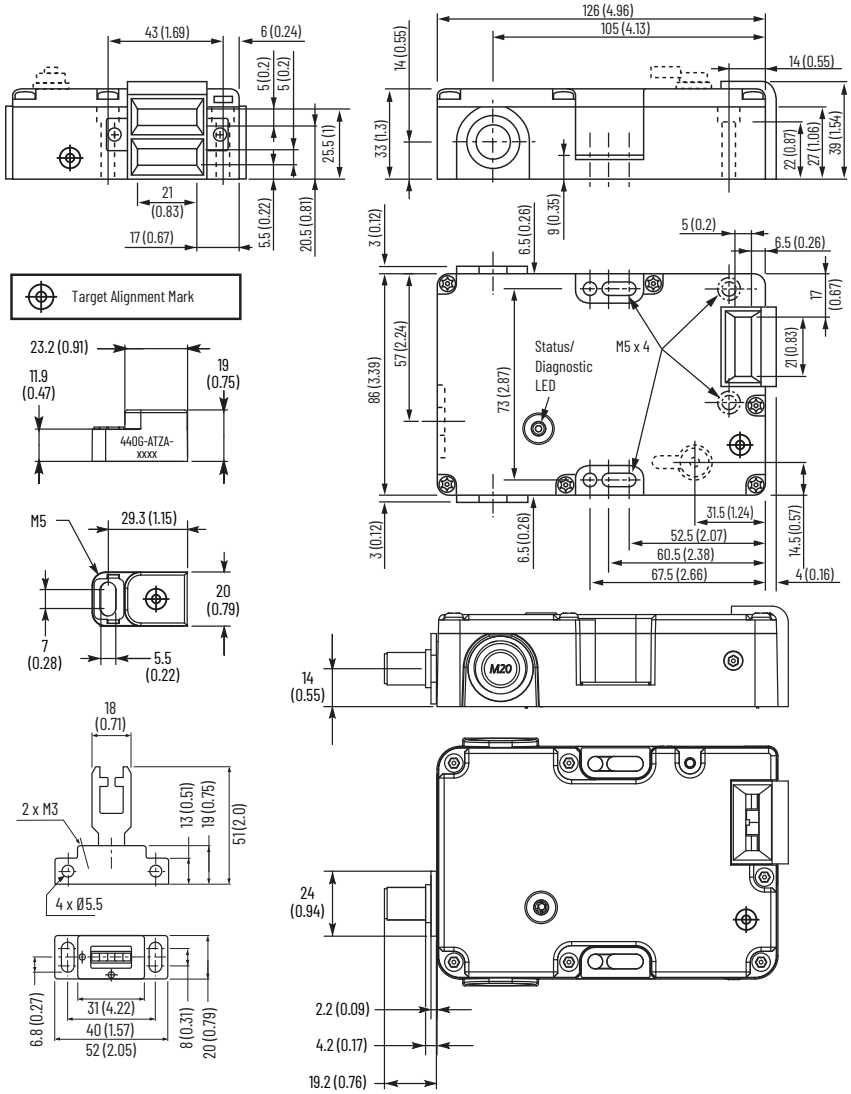

Typical Wiring Diagrams

Table 9 - 8-pin Micro (M12)

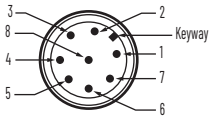

Pin	Color	Function
1	White	Aux
2	Brown	24V DC +
3	Green	Lock
4	Yellow	Safety B+
5	Gray	Safety A
6	Pink	Safety B
7	Blue	Gnd/0V
8	Red	Safety A+
Recommended 8-pin cordset: 889D-F8AB-x x = 2 (2 m [6.6 ft]), 5 (5 m [16.4 ft]), or 10 (10 m [32.8 ft]) for standard cable lengths.		

TLS-GD2 Guard Locking Switches

The TLS-GD2 guard locking switches have the following features:

- Power to Release or Power to Lock
- High locking force ≤ 2000 N (450 lbf)
- Five contacts: 2 N.C. and 1 N.O. for door position monitoring 1 N.C. and 1 N.O. or 2 N.C. for lock monitoring
- Rotatable head: Four possible key entry slots
- Conforms to ISO 14119 and IEC 60947-5-1
- Escape release version available
- IP69K, suitable for high pressure, high temperature washdown

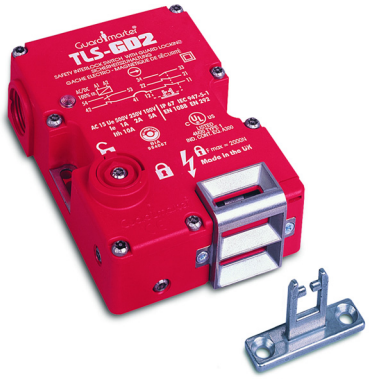

Specifications

Attribute	TLS-GD2 Guard Locking Switches			
Safety Ratings				
Standards	ISO 14119, IEC 60947-5-1			
Safety classification	Type 2 interlocking device with guard locking and low coding (tongue) per ISO 14119			
Functional safety	See Rockwell Automation Functional Safety Data Sheet, publication SAFETY-SR001			
Certifications	CE Marked for all applicable EU directives, cULus Listed, TÜV Certified, UKCA Marked for all applicable regulations rok.auto/certifications			
Outputs				
Safety contacts(1)	• TLS-1 and -2: 3 N.C. direct opening action • TLS-3: 4 N.C. direct opening action			
Auxiliary contacts	• TLS-1 and -2: 2 N.O. (1 solenoid monitoring) • TLS-3: 1 N.O.			
Thermal current/$_{Ith}$	10 A			
Rated insulation voltage (U_i)	500V			
Switching current at voltage, min	3 mA at 18V DC			
Utilization Category				
A600/AC-15 (Ue)	600V	500V	240V	120V
A600/AC-15 (Ie)	1.2 A	1.4 A	3 A	6 A
DC-13 (Ue)	24V			
DC-13 (Ie)	2 A			
Solenoid Characteristics				
Holding force F_{max} (ISO 14119)	• Plastic pins: 1950 N (488 lbf) • Steel bolts: 2600 N (585 lbf)			
Holding force F_{zh} (ISO 14119)	• Plastic pins: 1500 N (337 lbf) • Steel bolts: 2000 N (450 lbf)			
Power supply	24V AC/DC or 110V AC or 230V AC (solenoid)			
Solenoid power	7 W typical 100% ED			
Escape release button	Force max: 50 N (11.25 lbf)			

Attribute	TLS-GD2 Guard Locking Switches
Operating Characteristics	
Break contact force, min	20 N (4.5 lbf)
Actuation speed, max [mm/s (in/s)]	160 (6.29)
Actuation frequency, max	1 cycle/s
Operating radius, min [mm (in.)]	160 (6.3) [80 (3.15) with flexible actuator]
Mechanical life	1,000,000 operations
Environmental	
Enclosure type rating	IP66, IP67, IP69K
Operating temperature [°C (°F)]	-20...+60 (-4...+140)
Physical Characteristics	
Material	• Housing: UL Approved glass-filled PBT • Actuator: Stainless steel
Weight	400 g (0.88 lb)
Color	Red

(1) The safety contacts are described as normally closed (N.C.) that is, with the guard closed, the actuator in place (where relevant), and the machine able to be started.

Product Selection

Type	Contacts		Solenoid		Actuator Type	Cat. No.			
						Conduit		Connector[1]	
	Safety	Auxiliary	Contacts	Voltage		M20	1/2 inch NPT Adapter	12-pin M23	8-pin Micro (M12)[2]
TLS-1 GD2 Power to Release	2 N.C.	1 N.O.	1 N.C. and 1 N.O.	24V AC/DC	—	440G-T27121	—	440G-T27233	440G-T2NBBPH-1R
					GD2 Standard	440G-T27251	440G-T27169	440G-T27234	—
					Fully flexible	440G-T27252	440G-T27171	440G-T27235	—
				110V AC/DC	—	440G-T27124	—	—	—
					GD2 Standard	440G-T27253	440G-T27172	—	—
					Fully flexible	440G-T27254	440G-T27174	—	—
				230V AC/DC	—	440G-T27123	—	—	—
TLS-2 GD2 Power to Lock	2 N.C.	1 N.O.	1 N.C. and 1 N.O.	24V AC/DC	—	440G-T27127	—	440G-T27239	440G-T2NBBPH-1L
					GD2 Standard	440G-T27255	440G-T27175	440G-T27240	—
					Fully flexible	440G-T27256	440G-T27177	440G-T27241	—
				110V AC/DC	—	440G-T27132	—	—	—
					GD2 Standard	440G-T27257	440G-T27178	—	—
					Fully flexible	440G-T27258	440G-T27180	—	—
				230V AC/DC	—	440G-T27129	—	—	—
TLS-3 GD2 Power to Release	2 N.C.	1 N.O.	2 N.C.	24V AC/DC	—	440G-T27134	—	440G-T27245	440G-T2NBBPH-2R
					GD2 Standard	440G-T27259	440G-T27181	440G-T27246	—
					Fully flexible	440G-T27260	440G-T27183	440G-T27247	—
				110V AC/DC	—	440G-T27138	—	—	—
					GD2 Standard	440G-T27261	440G-T27184	—	—
					Fully Flexible	440G-T27262	440G-T27186	—	—
				230V AC/DC	—	440G-T27136	—	—	—
TLS-1 GD2 Power to Release with Escape Release	2 N.C.	1 N.O.	1 N.C. and 1 N.O.	24V AC/DC	—	440G-T21BNPM-1B	440G-T21BNPT-1B	440G-T21BNPL-1B	440G-T2NBNPH-1B
					GD2 Standard	440G-T21BGPM-1B	440G-T21BGPT-1B	440G-T21BGPL-1B	—
				110V AC/DC	—	440G-T21BNPM-4B	440G-T21BNPT-4B	—	—
					GD2 Standard	440G-T21BGPM-4B	440G-T21BGPT-4B	—	—
TLS-3 GD2 Power to Release with Escape Release	2 N.C.	1 N.O.	2 N.C.	24V AC/DC	—	440G-T21BNPM-2B	440G-T21BNPT-2B	440G-T21BNPL-2B	440G-T2NBNPH-2B
					GD2 Standard	440G-T21BGPM-2B	440G-T21BGPT-2B	440G-T21BGPL-2B	—
				110V AC/DC	—	440G-T21BNPM-5B	440G-T21BNPT-5B	—	—
					GD2 Standard	440G-T21BGPM-5B	440G-T21BGPT-5B	—	—

(1) For connector ratings, see Table 12 on page 20.
(2) With an 8-pin micro connector, not all contacts are connected. See Typical Wiring Diagrams on page 17 for wiring details.

Table 10 - Connection Systems

Description	8-pin Micro (M12)	12-wire, 12-pin M23	9-wire, 12-pin M23 [1]
Cordset	889D-F8AB-*x* [2]	889M-F12AH-*x* [2]	889M-F12X9AE-*x* [2]
Patchcord	889D-F8ABDM-*y* [3]	889M-F12AHMU-*z* [4]	—

(1) The 9-wire cordset can be used only with the TLS3 versions.
(2) *x* = 2 (2 m [6.6 ft]), 5 (5 m [16.4 ft]), or 10 (10 m [32.8 ft]) for standard cable lengths.
(3) *y* = 1 (1 m [3.3 ft]), 2 (2 m [6.6 ft]), 3 (3 m [9.8 ft]), 5 (5 m [16.4 ft]), or 10 (10 m [32.8 ft]) for standard cable lengths.
(4) *z* = 0M3 (0.3 m [1 ft]), 0M6 (0.6 m [2 ft]), 1 (1 m [3.3 ft]), 2 (2 m [6.6 ft]), or 3 (3 m [9.8 ft]) for standard lengths.

Accessories

Description		Cat. No.
	GD2 standard actuator	440G-A27011
	GD2 flat actuator	440K-A11112
	Extended flat actuator	440K-A17116
	Fully flexible actuator	440G-A27143
	Sliding bolt actuator not to be used with the TLS1 Escape Release	440G-A27163
	Emergency override key (See the following Attention)	440G-A36026
	Flexible release—1 m (3.3 ft) cable	440G-A27356 (1)
	Flexible release—3 m (9.8 ft) cable	440G-A27357 (1)
	Dust cover	440K-A17183
	Sliding bolt	440K-AMDS

Description		Cat. No.
	Cover for TLS-1 with external override key for series D and earlier	440G-A27140
	Cover for TLS-3 with external override key for series D and earlier	440G-A27142
	Cover for TLS-1 with override key that is attached for series D and earlier	440G-A27207
	Cover for TLS-3 with override key that is attached for series D and earlier	440G-A27208
	Cover for TLS-1 with external override key for series E and later	440G-A27371
	Cover for TLS-3 with external override key for series E and later	440G-A27372
	Cover for TLS-1 with override key that is attached for series E and later	440G-A27373
	Cover for TLS-3 with override key that is attached for series E and later	440G-A27374
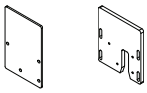	Mounting plate	440K-AMDSSMPB

(1) Flexible release cannot be used with Power to Lock switches.

ATTENTION: Do not attach the emergency override key to the TLS-GD2 switch.

Approximate Dimensions

Figure 8 - Guard Locking Switch Dimensions [mm (in.)]

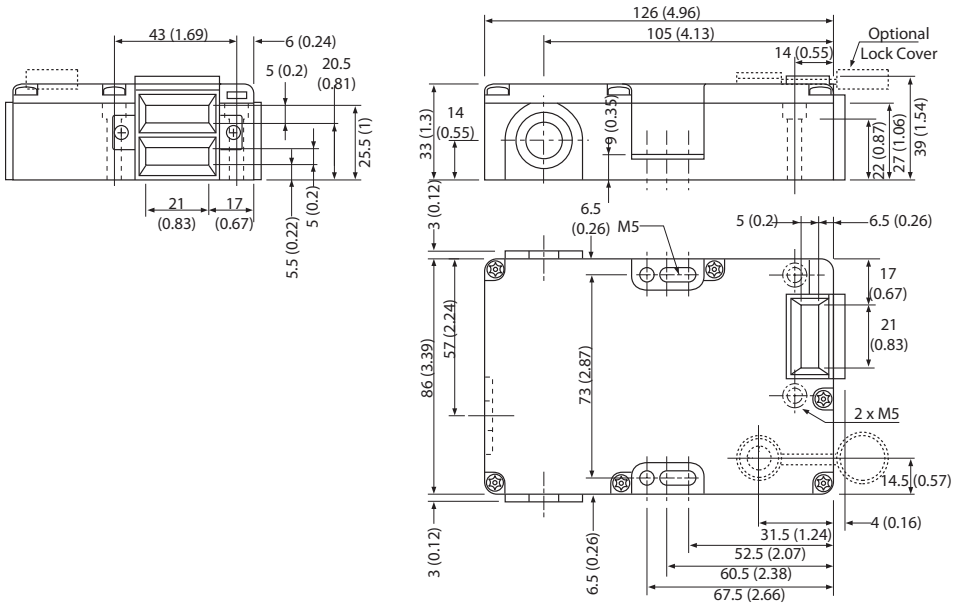

Figure 9 - TLS-GD2 Escape Release [mm (in.)]

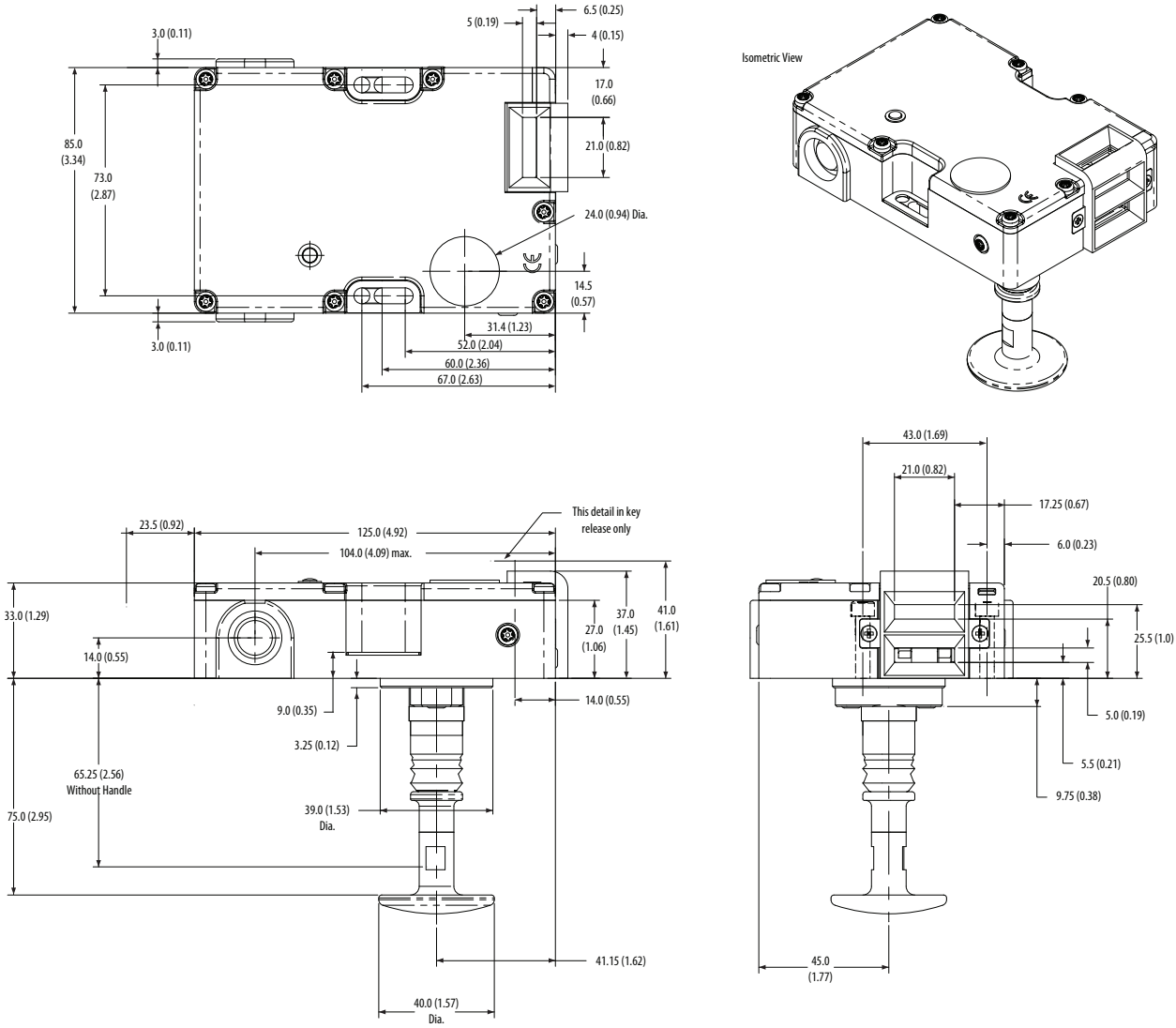

Typical Wiring Diagrams

Description	TLS1	TLS2	TLS3	
Contact configuration	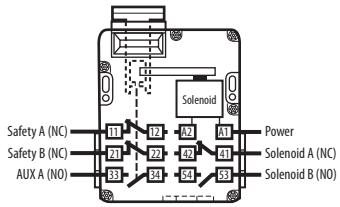 Jumper between 12 and 41		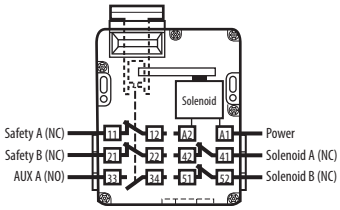 Jumper between 12 and 41 and 22 and 51	
Contact action ☐Open ■Closed	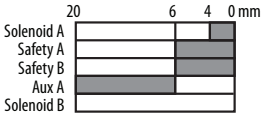 BBM	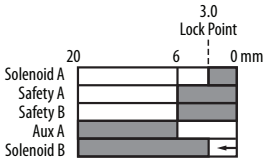 BBM	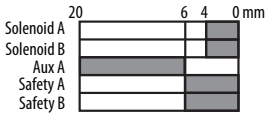 BBM	
8-pin Micro (M12) 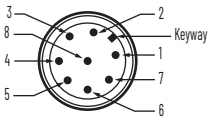	No jumper on 12-41		Jumper on 12-41 and 22-51	
	1 and 3	Solenoid A	1 and 3	Solenoid A
	2 and 7	Power	2 and 7	Power
	4 and 6	Safety B	4 and 6	Safety B and solenoid B
	5 and 8	Safety A	5 and 8	Safety A and solenoid A
12-pin M23 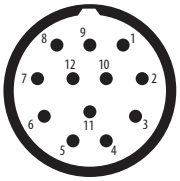	1 and 3	Solenoid power	1 and 3	Solenoid power
	4 and 12	Safety A (1)	4 and 12	Safety A (1)
	7 and 8	Safety B	7 and 5	Safety B (1)
	9 and 10	Aux A	9 and 10	Aux A
	6 and 11	Solenoid A (1)	6 and 11	Solenoid A (1)
	2 and 5	Solenoid B	2 and 8	Solenoid B (1)
8-pin cordset 889D-F8AB-*x* (2)	Brown, blue	Solenoid power	Brown, blue	Solenoid power
	Gray, red	Safety A	Gray, red	Safety A and Solenoid A
	Yellow, pink	Safety B	Yellow, pink	Safety B and Solenoid B
	White, green	Solenoid A	White, green	Solenoid A
12-pin, 9-wire cordset 889M-F12X9AE-*x* (2)	Cannot be used		Brown, blue	Solenoid power
			White, green	Safety A and solenoid A
			Yellow, gray	Safety B and solenoid B
			Pink, red	Aux A
			Pink/yellow	Not connected
12-pin, 12-wire cordset 889M-F12AH-*x* (2)	Brown, gray	Solenoid power	Brown, gray	Solenoid power
	Pink, green	Safety A (1)	Pink, green	Safety A (1)
	White, red/blue	Safety B	White, red	Safety B (1)
	Black, violet	Aux A	Black, violet	Aux A
	Gray/pink, yellow	Solenoid A (1)	Grey/pink, yellow	Solenoid A (1)
	Blue, red	Solenoid B	Blue, red/blue	Solenoid B (1)

(1) See warning statements on page 18.
(2) *x* = 2 (2 m [6.6 ft]), 5 (5 m [16.4 ft]) or 10 (10 m [32.8 ft]) for standard cable lengths.

WARNING: To monitor independently one or more safety contacts and the solenoid feedback (TLS 1, 2, and 3):
- The 12-wire cordset 889M-F12AH-footnote must be used

and
- For the TLS1 and TLS2, the jumper from 12 to 41 must be removed.
- For the TLS3, the jumpers between 12 and 41 and 22 and 51 must be removed.

WARNING: Monitoring of one or more safety contacts and the solenoid feedback (in series) is available, when jumpers are in place and:
- For the TLS1 and TLS2, by using pins 4 and 6 on the 12-pin, M23 receptacle, or pink and yellow wires on the 12-wire cordset (889M-F12AH-*x* [(1)]).
- For the TLS3, by using pins 4 and 6 and pins 7 and 8 on the 12-pin, M23 receptacle, or pink and yellow and white and red/blue wires on the 12-wire cordset (889M-F12AH-*x* [(1)]).

(1) *x* = 2 (2 m [6.6 ft]), 5 (5 m [16.4 ft]), or 10 (10 m [32.8 ft]) for standard cable lengths.

440G-MT Guard Locking Switches

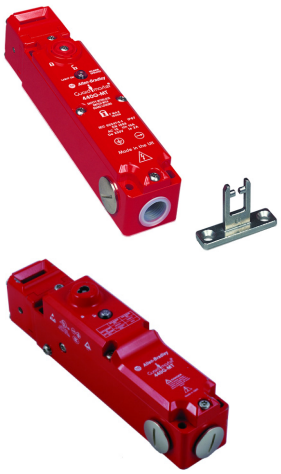

The 440G-MT solenoid switch locks a machine guard closed and can only be opened when a signal is applied to the internal solenoid, which releases the lock mechanism.

The 440G-MT guard locking solenoid switches have the following features:

- Type 2 Interlocking Device with Guard Locking and low coding per ISO 14119
- High Fzh (holding force): 1500 N (337 lb)
- Mechanical lock (Power to Release)
- Heavy-duty, die-cast alloy housing for use in harsh environments
- Diagnostic version available with built-in status indicator to indicate door status independent of lock status

Specifications

Attribute	440G-MT Guard Locking Switches			
Safety Ratings				
Standards	ISO 14119, IEC 60947-5-1			
Safety classification	Type 2 Interlocking Device with Guard Locking and low coding per ISO 14119			
Functional safety	See Rockwell Automation Functional Safety Data Sheet, publication SAFETY-SR001			
Certifications	CE Marked for all applicable EU directives, cULus Listed, TÜV Certified, UKCA Marked for all applicable regulations rok.auto/certifications			
Outputs				
Safety contacts(1)	3 N.C. or 2 N.C. direct opening action			
Auxiliary contacts	1 N.O. or 2 N.O.			
Thermal current/$_{Ith}$	10 A			
Rated insulation voltage (U_i)	500V			
Switching current at voltage, min	3 mA at 18V DC			
Utilization Category				
A600/AC-15 (Ue)	600V	500V	240V	120V
A600/AC-15 (Ie)	1.2 A	1.4 A	3 A	6 A
DC-13 (Ue)	24V			
DC-13 (Ie)	2 A			
Solenoid Characteristics				
Locking type	Power to Release			
Holding force, max	1600 N (360 lbf)			
Power supply	24V AC/DC or 110V AC or 230V AC			
Solenoid power	13 W typical 100% ED			
Operating Characteristics				
Break contact force, min	6 N (1.35 lbf)			
Actuation speed, max [mm/s (in/s)]	160 (6.29)			
Actuation frequency, max	2 cycles/s			
Operating radius, min [mm (in)]	60 (2.36)			
Mechanical life	1,000,000 operations			
Environmental				
Enclosure type rating	IP67			
Operating temperature [°C (°F)]	-25...+60 (13...140)			
Physical Characteristics				
Material	• Housing: Painted zinc alloy • Actuator: Stainless steel			
Weight [g (in.)]	1400 (3.08)			
Color	Red			

(1) The safety contacts are described as normally closed (N.C.) that is, with the guard closed, the actuator in place (where relevant), and the machine able to be started.

Product Selection

Solenoid Voltage	Contact			Actuator Type	Cat. No.			
					M20 Conduit		Connector[1]	
	Safety	Auxiliary	Action		M20	1/2 inch NPT	12-pin M23	8-pin Micro (M12) [2]
24V AC/DC	3 N.C.	1 N.O.	BBM	GD2 standard	440G-MT47037	440G-MT47039	440G-MT47041	440G-M3NBGDH-AC
				Fully flexible	440G-MT47038	440G-MT47040	440G-MT47042	440G-M3NBBDH-AC
				—	440G-MT47007	440G-MT47008	440G-MT47043	—
	2 N.C.	2 N.O.	BBM	GD2 standard	440G-MT47044	440G-MT47046	440G-MT47048	—
				Fully flexible	440G-MT47045	440G-MT47047	440G-MT47049	—
				—	440G-MT47010	440G-MT47011	440G-MT47050	—
24V DC with diagnostic function and metal override key	3 N.C.	1 N.O.	BBM	GD2 standard	440G-MT47149	440G-MT47150	440G-MT47151	—
				Fully flexible	440G-MT47152	440G-MT47153	440G-MT47154	—
				No actuator	440G-MT47155	440G-MT47156	440G-MT47157	—
	2 N.C.	2 N.O.	BBM	GD2 standard	440G-MT47158	440G-MT47159	440G-MT47160	—
				Fully flexible	440G-MT47161	440G-MT47162	440G-MT47163	—
				No actuator	440G-MT47164	440G-MT47165	440G-MT47166	—
110V AC/DC	3 N.C.	1 N.O.	BBM	GD2 standard	440G-MT47070	440G-MT47073	—	—
				Fully flexible	440G-MT47071	440G-MT47074	—	—
				—	440G-MT47013	440G-MT47009	—	—
	2 N.C.	2 N.O.	BBM	GD2 standard	440G-MT47077	440G-MT47079	—	—
				Fully flexible	440G-MT47078	440G-MT47080	—	—
				—	440G-MT47012	440G-MT47014	—	—
230V AC/DC	3 N.C.	1 N.O.	BBM	—	440G-MT47016	440G-MT47017	—	—
	2 N.C.	2 N.O.		—	440G-MT47015	440G-MT47024	—	—

(1) For connector ratings, see Table 12.
(2) With an 8-pin micro (M12) connector, not all contacts are connected. See Typical Wiring Diagrams on page 22 for wiring details.

Table 11 - Connection Systems

Description	8-pin Micro	12-pin M23
Cordset	889D-F8AB-*x* [1]	889M-F12AH-*x* [2]
Patchcord	889D-F8ABDM-*y* [2]	889M-F12AHMU-*z* [3]

(1) *x* = 2 (2 m [6.6 ft]), 5 (5 m [16.4 ft]), or 10 (10 m [32.8 ft]) for standard cable lengths.
(2) *y* = 1 (1 m [3.3 ft]), 2 (2 m [6.6 ft]), 3 (3 m [9.8 ft]), 5 (5 m [16.4 ft]), or 10 (10 m [32.8 ft]) for standard cable lengths.
(3) *z* = 0M3 (0.3 m [1 ft]), 0M6 (0.6 m [2 ft]), 1 (1 m [3.3 ft]), 2 (2 m [6.6 ft]) or 3 (3 m [9.8 ft]) for standard lengths.

Table 12 - Connector Ratings

	Max Ratings		Applicable Standards
	AC	DC	
8-pin Micro (M12)	30V, 2 A	30V, 2 A	IEC 61076-2-101
12-pin M23	63V, 6 A	63V, 6 A	IEC 61984

Accessories

Description		Cat. No.
	GD2 standard actuator	440G-A27011
	GD2 flat actuator	440K-A11112
	Fully flexible actuator	440G-A27143
	Sliding bolt actuator	440G-A27163

Description		Cat. No.
	Extended flat actuator	440K-A17116
	Replacement cover, no status indicator, no override key	440G-MT47120
	Replacement cover, status indicator, override key	440G-MT47123
	Emergency override key (See following Attention)	440G-A36026
	Dust cover	440K-A17180

ATTENTION: Do not attach the emergency override key to the 440G-MT switch.

Approximate Dimensions

Figure 10 - Guard Locking Switch [mm (in.)]

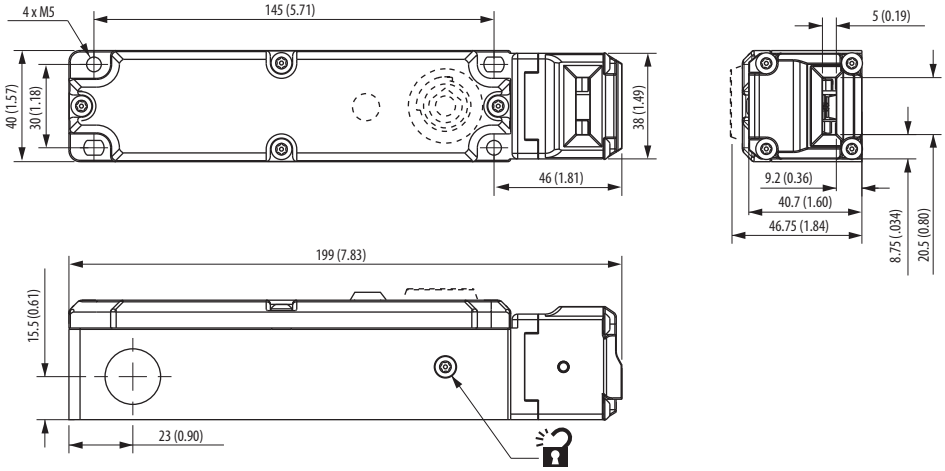

Typical Wiring Diagrams

Description		2 N.C. and 2 N.O.	3 N.C. and 1 N.O.
Contact configuration		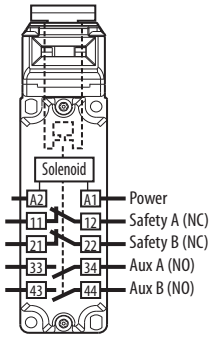	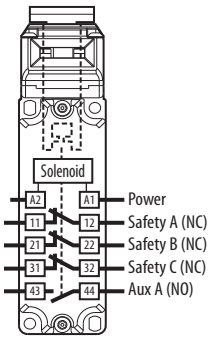
Contact action ☐Open ■Closed		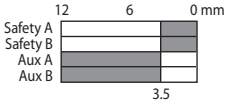 BBM	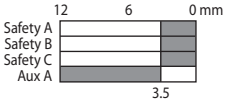 BBM
8-pin Micro (M12) 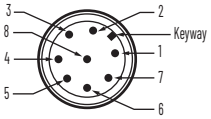	1 and 3	—	Aux A
	2 and 7		Power
	4 and 6		Safety B
	5 and 8		Safety A
12-pin m23 QD 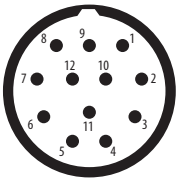	1 and 3	Solenoid power	Solenoid power
	4 and 6	Safety A	Safety A
	7 and 8	Safety B	Safety B
	2 and 5	Aux A	Safety C
	9 and 10	Aux B	Aux A
	11	Not connected	Not connected
	12	Ground	Ground
8-pin Cordset 889D-F8AB-x (1)	Brown, blue	—	Solenoid power
	Gray, red	—	Safety A
	Yellow, pink	—	Safety B
	White, green	—	Aux A
12-pin Cordset 889M-F12AH-x (1)	Brown, gray	Solenoid power	Solenoid power
	Pink, yellow	Safety A	Safety A
	White, red/blue	Safety B	Safety B
	Blue, red	Aux A	Safety C
	Black, violet	Aux B	Aux A
	Green	Ground	Ground
	Gray/pink	Not connected	Not connected

(1) *x* = 2 (2 m [6.6 ft]), 5 (5 m [16.4 ft]), or 10 (10 m [32.8 ft]) for standard cable lengths.

Table 13 - Diagnostic Version

Actuator	Status Indicator Output Matrix	
	Solenoid Off	Solenoid On
In	Green	Amber
Out	Flashing red	Red

Table 14 - Diagnostic Electrical Output

Actuator	Voltage
In	0V DC
Out	+24V DC
Electrical output independent of solenoid status. Maximum output is 100 mA.	

Atlas 5 Guard Locking Switches

The Atlas™ 5 guard locking switches have the following features:

- Type 2 interlocking device with guard locking and low coding per ISO 14119
- High Fzh (holding force): 3850 N (865 lb)
- Mechanical lock (Power to Release)
- Heavy-duty, die-cast alloy housing for use in harsh environments
- Patented self-aligning head tolerates actuator misalignment

Specifications

Attribute	Atlas 5 Guard Locking Switches	
Safety ratings		
Standards	ISO 14119, IEC 60947-5-1	
Safety classification	Type 2 interlocking device with guard locking and low coding per ISO 14119	
Functional safety	See Rockwell Automation Functional Safety Data Sheet, publication SAFETY-SR001	
Certifications	cULus Listed, TÜV Certified, UKCA Marked for all applicable regulations, CE Marked for all applicable EU directives rok.auto/certifications	
Outputs		
Safety contacts	Atlas 5: 2 N.C. direct opening action; 1 N.O. direct opening action Atlas 5 trapped key (left hand): 2 N.C. direct opening action; 1 N.O. direct opening action	
Auxiliary contacts	1 N.O.	
Thermal current/$_{Ith}$	10 A	
Rated insulation voltage (U_i)	500V	
Switching current at voltage, min	3 mA at 18V DC	
Utilization Category		
AC-15 (Ue)	240V	120V
AC-15 (Ie)	1.5 A	3 A
DC-13 (Ue)	24V	
DC-13 (Ie)	2 A	
Solenoid characteristics		
Locking type	Power to Release	
Holding force F_{max}	5000 N (1124 lbf)	
Holding force F_{zh}	3850 N (865 lbf)	
Power supply	24V AC/DC or 110V AC or 230V AC (solenoid)	
Solenoid power	13 W typical 100% ED	
Operating characteristics		
Break contact force, min	12 N (2.7 lbf)	
Actuation speed, max [mm/s (in/s)]	160 (6.29)	
Actuation frequency, max	2 cycles/s	
Operating radius, min [mm (in.)]	300 (11.8) end entry, 800 (31.5) front entry	
Mechanical life	1,000,000 operations	
Environmental		
Enclosure type rating	IP65	
Operating temperature [°C (°F)]	-10...+60 (14...140)	
Physical Characteristics		
Material	• Housing: Die-cast alloy • Actuator: Stainless steel	
Weight [g (in.)]	1200 (2.65)	
Color	Red	

Product Selection

Module Type	Actuator Type	Contact		Solenoid Contacts	Solenoid Voltage	Cat. No.			
						Conduit Entry[1]			
		Safety	Auxiliary			M20	1/2 inch NPT Adapter	12-pin M23[2]	8-pin Micro (M12)[2]
Standard	Standard	2 N.C.	1 N.O.	2 N.C. and 1 N.O.	24V AC/DC	440G-L07264	440G-L07258	440G-L07298	440G-L2NNSDH-3N
					110V AC/DC	440G-L07263	440G-L07257	—	—
					230V AC/DC	440G-L07262	440G-L07256	—	—
LH Key Lock					24V AC/DC	440G-L07255	440G-L07249	440G-L07301	440G-L2NNSDH-38
					110V AC/DC	440G-L07254	440G-L07248	—	—
					230V AC/DC	440G-L07253	440G-L07247	—	—

(1) For connector ratings, see Safety Switches and Connectors.
(2) With an 8-pin micro connector, not all contacts are connected. See Typical Wiring Diagrams on page 26 for details.

Table 15 - Connection Systems

Description	Cat. No.	
	8-pin Micro (M12)	12-pin M23
Cordset	889D-F8AB-*x* [1]	889M-F12AH-*x* [1]
Patchcord	889D-F8ABDM-*y* [2]	889M-F12AHMU-*z* [3]

(1) *x* = 2 (2 m [6.6 ft]), 5 (5 m [16.4 ft]), or 10 (10 m [32.8 ft]) for standard cable lengths.
(2) *y* = 1 (1 m [3.3 ft]), 2 (2 m [6.6 ft]), 3 (3 m [9.8 ft]), 5 (5 m [16.4 ft]), or 10 (10 m [32.8 ft]) for standard cable lengths.
(3) *z* = 0M3 (0.3 m [1 ft]), 0M6 (0.6 m [2 ft]), 1 (1 m [3.3 ft]), 2 (2 m [6.6 ft]), or 3 (3 m [9.8 ft]) for standard lengths.

Accessories

Description		Cat. No.
	Standard actuator	440G-A07136
	Atlas replacement end cap	440G-A07180
	Fully flex actuator	440G-A07269
	Dust cover	440K-A17181

Approximate Dimensions

Figure 11 - Guard Locking Switch Dimensions [mm (in.)]

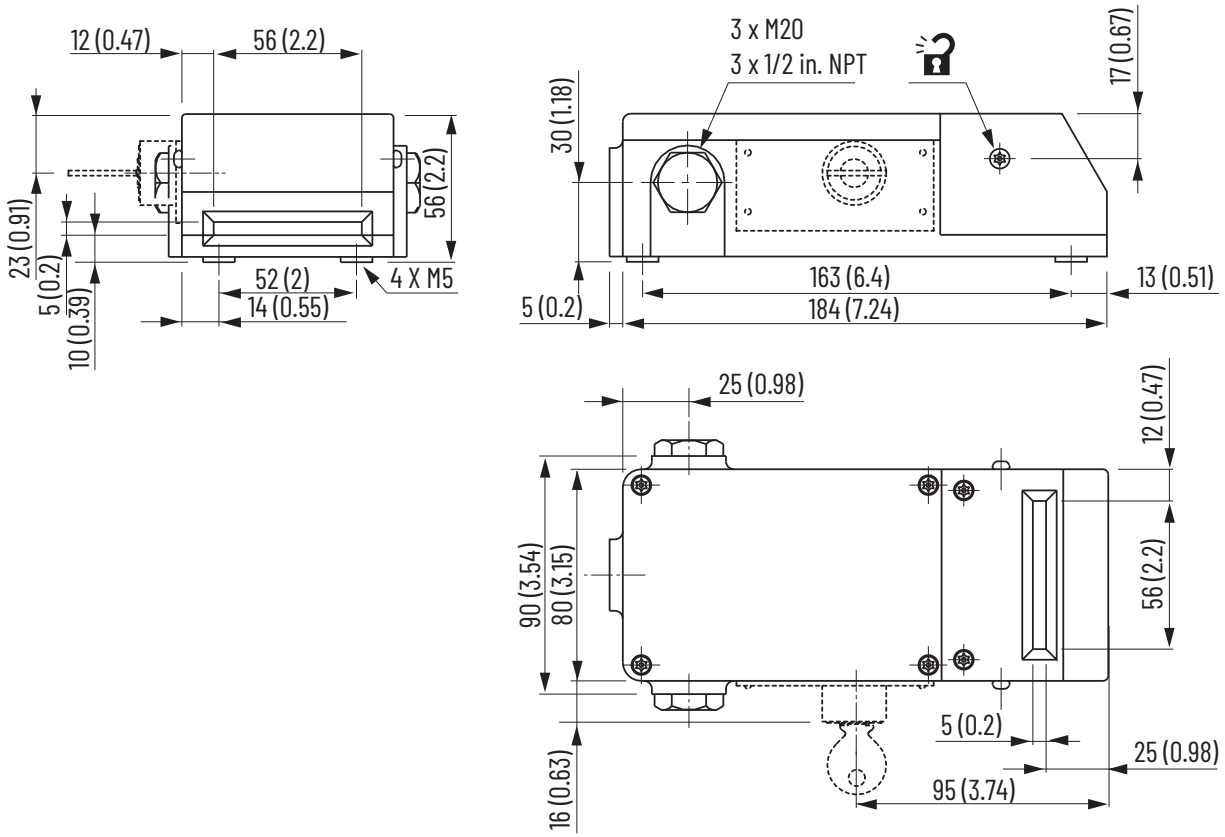

Typical Wiring Diagrams

Figure 12 - Contact Configuration

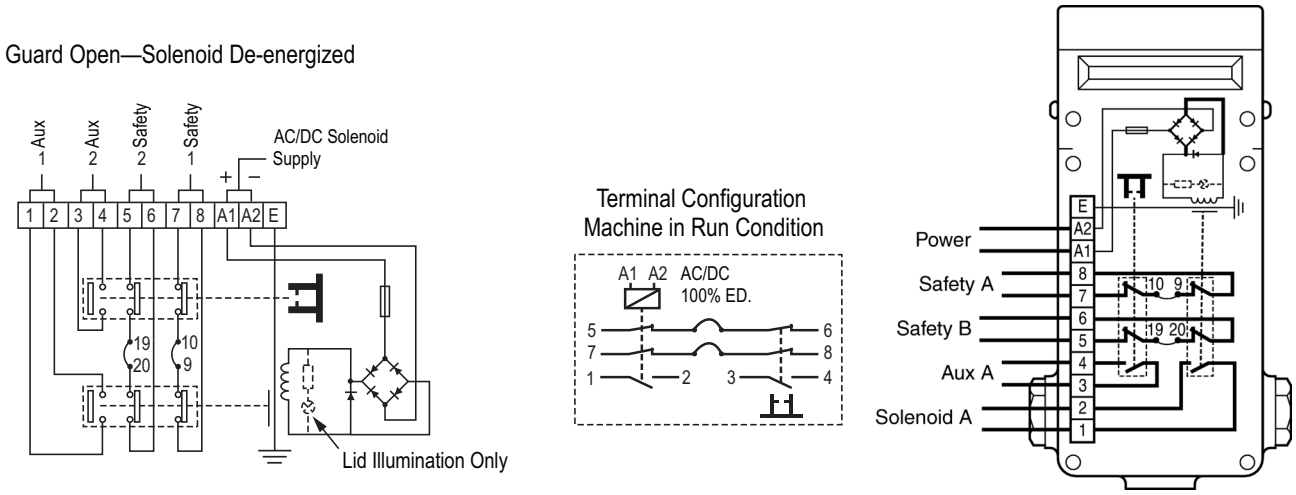

Figure 13 - Contact Action

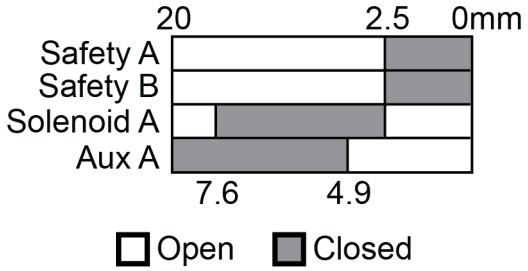

Table 16 - 8-pin (M12) Cordset

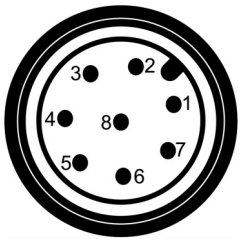

Pin	Color	Function
1 and 3	White/Green	Solenoid A
2 and 7	Brown/Blue	Power
4 and 6	Yellow/Pink	Safety B
5 and 8	Gray/Red	Safety A
Recommended 8-pin cordset: 889D-F8AB-x x = 2 (2 m [6.6 ft]), 5 (5 m [16.4 ft]), or 10 (10 m [32.8 ft]) for standard cable lengths.		

Table 17 - 12-pin (M23) Cordset

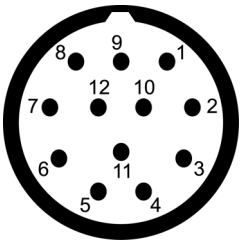

Pin	Color	Function
1 and 3	Solenoid Power	Brown/Gray
2 and 5	Auxiliary A	Blue/Red
4 and 6	Safety A	Pink/Yellow
7 and 8	Safety B	White/Red/Blue
9 and 10	Solenoid A	Black/Violet
11	Not Connected	—
12	Ground	Green
Recommended 12-pin cordset: 889M-F12AH-x x = 2 (2 m [6.6 ft]), 5 (5 m [16.4 ft]), or 10 (10 m [32.8 ft]) for standard cable lengths.		

440G-S Spartan Guard Locking Switches

The 440G-S Spartan guard locking switches have the following features:

- Type 2 interlock with guard locking and low coding
- Power to Release
- Lid-mounted status indication
- Rotatable head: Four possible key entry slots
- A catch kit with actuator alignment helps protect the unit from actuator damage due to poor guard alignment
- Manual release points with security screws or special key allow the switch to be unlocked if an unforeseen and uncommon circumstance occurs, such as a power failure

Specifications

Attribute	440G-S Spartan Guard Locking Switches
Safety Ratings	
Standards	ISO 14119, IEC 60947-5-1
Safety classification	Type 2 interlocking device with guard locking and low coding per ISO 14119
Functional safety	See Rockwell Automation Functional Safety Data Sheet, publication SAFETY-SR001
Certifications	cULus Listed, TÜV Certified, UKCA Marked for all applicable regulations, CE Marked for all applicable EU directives rok.auto/certifications
Outputs	
Safety contacts	2 N.C. or 3 N.C. direct opening action
Auxiliary contacts	1 N.O.
Thermal current (I_{th})	10 A
Insulation voltage	500V
Impulse withstand voltage	2500V
Utilization Category AC (Ue) (Ie) DC	AC 15 500V 250V 100V 1 A 2 A 5 A 250V/0.5 A 24V/2 A
Switched current/volt/load, max	500V/500VA
Current, min	5V 5 mA DC
Safety contact gap [mm (in.)]	>2 (0.08)
Solenoid Characteristics	
Holding force F_{max}	1000 N (225 lb)
Holding force F_{zh}	770 N (173 lb)
Power supply	24V AC/DC, 110V AC, 230V AC (solenoid)
Solenoid power	Typically 7 W 100% ED

Attribute	440G-S Spartan Guard Locking Switches
Operating Characteristics	
Actuation speed, max [mm/s (in/s)]	160 (6.3)
Actuation frequency, max	1 cycle per second
Mechanical life	1,000,000 operations
Environmental	
Pollution degree (1)	3
Operating temperature [°C (°F)]	-20...+60 (-4...+140)
Protection	IP67
Physical Characteristics	
Material	• Housing: UL Approved glass filled polyester • Actuator: Stainless steel
Conduit entry	1 x M20 or quick disconnect style
Fixing	2 x M5
Mounting	Any position
Electrical life	1,000,000 operations
Weight [g (lb)]	260 (0.57)
Color	Red
Operating radius, min [mm (in.)]	175 (6.9)
Status indicator	Solenoid monitor

(1) Conductive pollution occurs, or dry, non-conductive pollution occurs which becomes conductive due to condensation.

Product Selection

Actuator	Solenoid Voltage	Contacts		Cat. No.		
		Safety	Aux.	M20 Conduit	M20 Conduit/ 1/2in. Adapter	Quick Disconnect
Standard	24V AC/DC	2 N.C.	1 N.O.	440G-S36001	440G-S36044	440G-S36058
		3 N.C.	—	440G-S36007	440G-S36047	40G-S36059
	110V AC/DC	2 N.C.	1 N.O.	440G-S36003	440G-S36045	440G-S36060
		3 N.C.	—	440G-S36009	440G-S36048	440G-S36061
	230V AC/DC	2 N.C.	1 N.O.	440G-S36005	440G-S36046	440G-S36062
		3 N.C.	—	440G-S36011	—	440G-S36063
	Mating cable					889M-F12X9AE-x (1)

(1) *x* = 2 (2 m [6.6 ft]), 5 (5 m [16.4 ft]), or 10 (10 m [32.8 ft]) for standard cable lengths.

Table 18 - Connection Systems

Description	Cat. No.
	12-pin M23
Cordset	889M-F12AH-x (1)
Patchcord	889M-F12AHMU-z (1)

(1) *z* = 0M3 (0.3 m [1 ft]), 0M6 (0.6 m [2 ft]), 1 (1 m [3.3 ft]), 2 (2 m [6.6 ft]), or 3 (3 m [9.8 ft]) for standard lengths.

Accessories

Description		Cat. No.
	Replacement actuator with catch retainer and guide	440G-A36050
	Manual release key	440G-A36026

Approximate Dimensions

Figure 14 - Guard Locking Switch [mm (in.)]

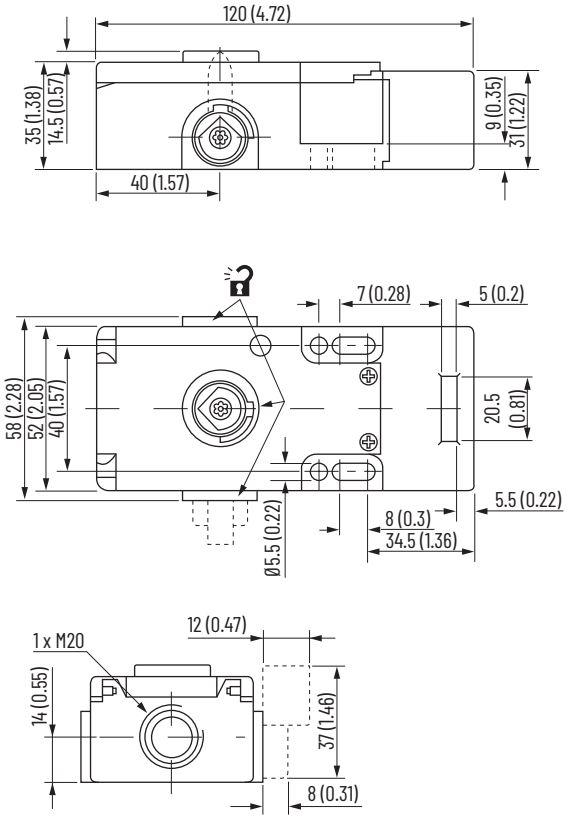

Typical Wiring Diagrams

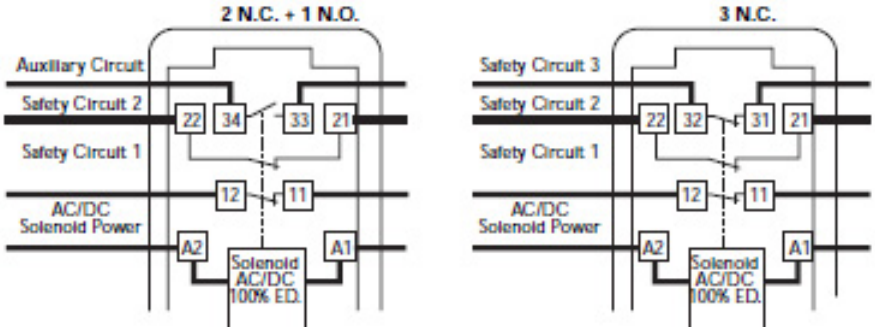

Connector Pinout		2 N.C. + 1 N.O.		3 N.C.	
		Terminal	Contact	Terminal	Contact
	1	A1	Solenoid	A1	Solenoid
	3	A2	Power	A2	Power
	4	11	N.C.	11	N.C.
	6	12		12	
	7	21	N.C.	21	N.C.
	8	22		22	
	9	33	N.O.	31	N.C.
	19	34		32	

Figure 15 - Contact Action

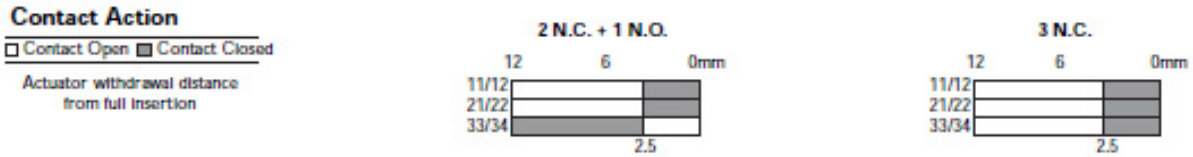

Figure 16 - Application Details

Four possible actuator entry positions

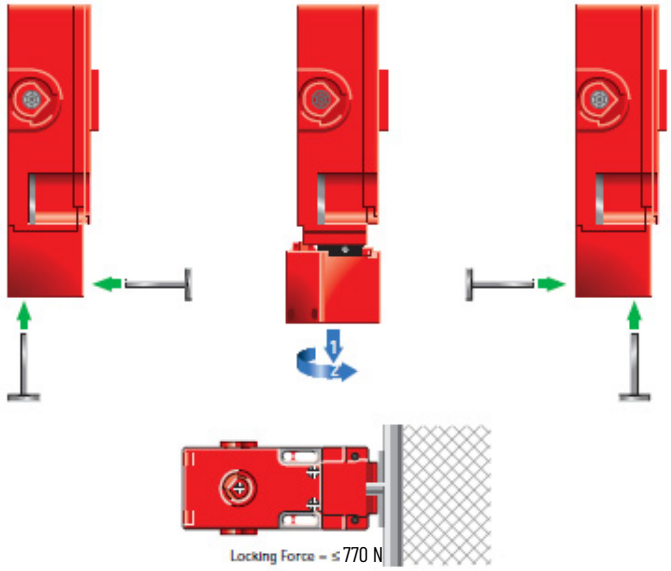

Notes:

Sprite Miniature Hinge Interlock Switches

The Sprite miniature hinge interlock switches have the following features:

- Ideal for small, light-weight guards
- The smallest hinge interlock switch available, 75 x 25 mm (2.95 x 0.98 in.) case
- Degree of operation can be customized with adjustable cam
- Contacts, 2 N.C. or 1 N.C. and 1 N.O.
- Four possible shaft positions, easy to install

Specifications

Attribute	Sprite Miniature Hinge Interlock Switches			
Safety Ratings				
Standards	ISO 14119, 60947-5-1			
Safety classification	Can be suitable for use in Category 3 or Category 4 systems depending on the architecture and application characteristics.			
Functional Safety Data (related to safety contacts) (1)	B10d: > 2 x 10^6 operations at minimum load PFH_D: < 3 x10^{-7} MTTFd: > 385 years Can be suitable for use in Performance Level PLe or PLd systems (according to ISO 13849-1) and for use in SIL 2 or SIL 3 systems (according to IEC 62061) depending on the architecture and application characteristics			
Certifications	CE Marked for all applicable EU directives, UKCA Marked for all applicable regulations, cULus Listed, NRTL/C, TÜV Certified rok.auto/certifications			
Operating Characteristics				
Break contact force, min	0.08 N•m (0.7 lb•in) (torque on shaft)			
Actuation speed, max [mm/s (in/s)]	160 (6.29)			
Actuation frequency, max	1 cycle/s			
Mechanical life	1,000,000 operations			
Utilization Category				
A600/AC-15 (Ue)	600V	500V	240V	120V
A600/AC-15 (Ie)	1.2 A	1.4 A	3 A	6 A
DC-13 (Ue)	24V	—	—	—
DC-13 (Ie)	2 A	—	—	—

Attribute	Sprite Miniature Hinge Interlock Switches	
Outputs		
Safety contacts(2)	2 N.C. direct opening action	1 N.C. direct opening action
Auxiliary contacts	—	1 N.O.
Shaft rotation for contact operation	11° max, 3° min (adjustable)	
Thermal current/$_{Ith}$	10 A	
Rated Insulation voltage (U_i)	500V	
Switching current at voltage, min	3 mA at 18V DC	
Environmental		
Enclosure type rating	IP67	
Operating temperature [°C (°F)]	-20...+80 (-4...+176)	
General		
Material	• Housing: UL-approved glass-filled PBT • Actuator: Stainless steel	
Weight	80 g (0.176 lb)	
Color	Red	

(1) Usable for ISO 13849-1 and IEC 62061. Data is based on the B10d value that is given and: Usage rate of 1op/10min, 24hr/day, 360 days/year, which represents 51,840 operations per year.
Mission time/Proof test interval of 38 years.

(2) The safety contacts are described as normally closed (N.C.) for example: with the guard closed, the actuator in place (where relevant), and the machine able to be started.

Product Selection

Contact		Action	Actuator Shaft Dimensions [mm (in.)]	Shaft Type	Cat. No.			
					M16 Conduit		Connector[1] (M12)	
Safety	Auxiliary				M16	1/2 inch NPT Adapter	4-pin Micro	Connect to ArmorBlock Guard I/O 5-pin Micro
2 N.C.	–	–	80 x Ø10 (3.14 x 0.39)	Solid	440H-S34019	440H-S34023	440H-S34027	–
			60 x Ø8 (2.36 x 0.31)		440H-S34020	440H-S34024	440H-S34028	–
			50 x Ø10 (1.96 x 0.39)		440H-S34010	440H-S34017	440H-S34014	440H-S2NNPPS
			30 x Ø16 (1.18 x 0.63) bore Ø9.5 (0.37)	Pre-bored	440H-S34033	440H-S34034	440H-S34035	440H-S2NNHPS
1 N.C.	1 N.O.	BBM	80 x Ø10 (3.14 x 0.39)	Solid	440H-S34021	440H-S34025	440H-S34029	–
			60 x Ø8 (2.36 x 0.31)		440H-S34022	440H-S34026	440H-S34030	–
			50 x Ø10 (1.96 x 0.39)		440H-S34012	440H-S34018	440H-S34015	–
			30 x Ø16 (1.18 x 0.63) bore Ø9.5 (0.37)	Pre-bored	440H-S34036	–	–	–

(1) For connector ratings, see Table 20.

Table 19 - Connection Systems

Description	Cat. No.		
	4-pin Micro (M12)		5-pin Micro (M12) for ArmorBlock Guard I/O
	2 N.C.	1 N.C. and 1 N.O.	2 N.C.
Cordset	889D-F4AC-*x* [1]	889D-F4AC-*x* [1]	–
Patchcord	889D-F4ACDM-*y* [2]	889D-F4ACDM-*y* [2]	889D-F5ACDM-*x* [1]
Distribution box	889D-4zLT-DM4 [3]	898D-4zKT-DM4 [3]	–
Shorting plug	889D-41LU-DM	898D-41KU-DM	–
T-port	889D-43LY-D4	898D-43KY-D4	–

(1) *x* = 2 (2 m [6.6 ft]), 5 (5 m [16.4 ft]), or 10 (10 m [32.8 ft]) for standard cable lengths.
(2) *y* = 1 (1 m [3.3 ft]), 2 (2 m [6.6 ft]), 3 (3 m [9.8 ft]), 5 (5 m [16.4 ft]), or 10 (10 m [32.8 ft]) for standard cable lengths.
(3) *z* = 4 or 8 for number of ports.

Table 20 - Connector Ratings

Description	Max Ratings		Applicable Standards
	AC	DC	
4-pin Micro (M12)	250V, 4 A	250V, 4 A	IEC 61076-2-101
5-pin Micro (M12)	60V, 4 A	60V, 4 A	IEC 61076-2-101

Approximate Dimensions

Figure 17 - Hinge Interlock Switch [mm (in.)]

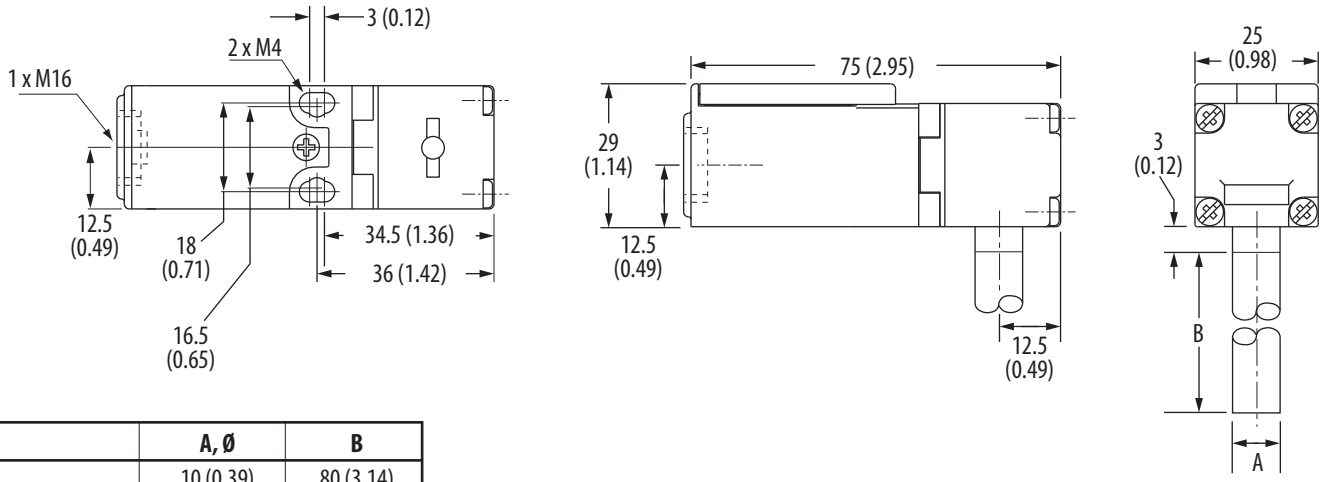

	A, Ø	B
mm (in.)	10 (0.39)	80 (3.14)
	8 (0.31)	60 (2.36)
	10 (0.39)	50 (1.96)

Figure 18 - Hollow Shaft [mm (in.)]

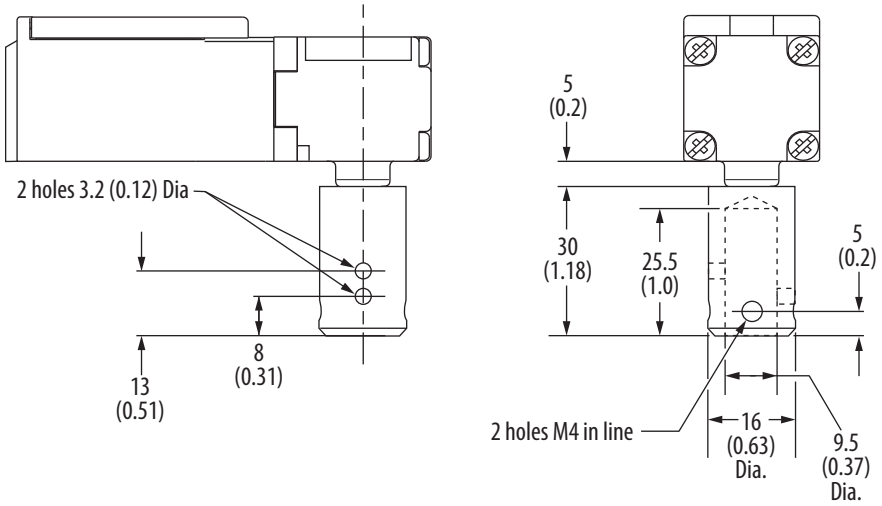

Typical Wiring Diagrams

Figure 19 - Contact Configuration

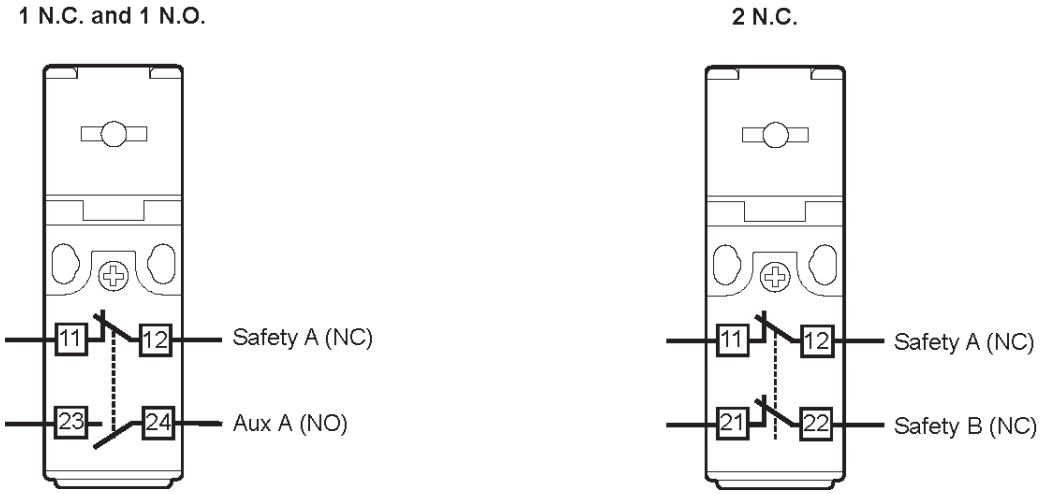

Figure 20 - Contact Action

Table 21 - 4-pin Mico (M12)

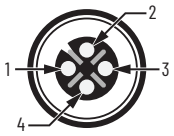

Pin	Color	4-pin Mico (M12)	
1	Brown	Safety A	Safety A
2	White	Aux A	Safety B
3	Blue	Safety A	Safety A
4	Black	Aux A	Safety B

Recommended 5-pin cordset: 889D-F4AC-x
x = 2 [2 m (6.6 ft)], 5 [5 m (16.4 ft)], or 10 [10 m (32.8 ft)] for standard cable lengths.

Table 22 - 5-pin Micro (M12) For ArmorBlock Guard I/O

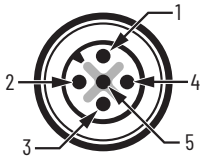

Pin	Color	Function
1	Brown	Safety A
2	White	Safety A
3	–	–
4	Blue	Safety B
5	Black	Safety B

Recommended 5-pin cordset: 889D-F5AC-x
x = 2 [2 m (6.6 ft)], 5 [5 m (16.4 ft)], or 10 [10 m (32.8 ft)] for standard cable lengths.

Ensign 3 Hinge Interlock Switches

The Ensign 3 hinge interlock switches have the following features:

- Compact size—90.5 x 31 x 30.4 mm (3.56 x 1.22 x 1.2 in.) housing
- Ideal for small, lightweight guards
- Degree of operation can be customized with adjustable cam
- Contacts, 2 N.C. and 1 N.O. or 3 N.C. (sealed to IP67)
- Four possible shaft positions, easy to install
- Solid and hollow shafts available

Specifications

Attribute	Ensign 3 Hinge Interlock Switches			
Safety Ratings				
Standards	ISO 14119, 60947-5-1			
Safety classification	Dual channel interlocks suitable for use in Category 3 or Category 4 systems.			
Functional Safety Data (related to safety contacts) (1)	B10d: > 2 x 10^6 operations at minimum load PFH_D: < 3 x10^{-7} MTTFd: > 385 years Can be suitable for use in Performance Level PLe or PLd systems (according to ISO 13849-1) and for use in SIL 2 or SIL 3 systems (according to IEC 62061) depending on the architecture and application characteristics			
Certifications	CE Marked for all applicable EU directives, UKCA Marked for all applicable regulations, cULus Listed, NRTL/C, TÜV Certified rok.auto/certifications			
Operating Characteristics				
Break contact force, min	0.08 N•m (0.7 lb•in) (torque on shaft)			
Actuation speed, max [mm/s (in/s)]	160 (6.29)			
Actuation frequency, max	1 cycle/s			
Mechanical life	1,000,000 operations			
Utilization Category				
A600/AC-15 (Ue)	600V	500V	240V	120V
A600/AC-15 (Ie)	1.2 A	1.4 A	3 A	6 A
DC-13 (Ue)	24V	—	—	—
DC-13 (Ie)	2 A	—	—	—
Outputs				
Safety contacts (2)	3 N.C. direct opening action		2 N.C. direct opening action	
Auxiliary contacts	—		1 N.O.	
Shaft rotation for contact operation	3 N.C. 12° max, 3° min (adjustable) 2 N.C. 1 N.O. (BBM) 14° max, 5° min (adjustable) 2 N.C. 1 N.O. (MBB) 12° max, 3° min (adjustable)			
Thermal current I_{th}	10 A			
Rated Insulation voltage (U_i)	500V			
Switching current at voltage, min	3 mA at 18V DC			
Environmental				
Enclosure type rating	IP67			
Operating temperature [°C (°F)]	-20...+80 (-4...+176)			
General				
Material	• Housing: UL-approved glass-filled PBT • Actuator: Stainless steel			
Weight	100 g (0.22 lb)			
Color	Red			

(1) Usable for ISO 13849-1 and IEC 62061. Data is based on the B10d value that is given and:
—Usage rate of 1op/10min, 24hr/day, 360 days/year, which represents 51,840 operations per year.
—Mission time/Proof test interval of 38 years.

(2) The safety contacts are described as normally closed (N.C.) for example: with the guard closed, the actuator in place (where relevant), and the machine able to be started.

Product Selection

Contact		Action	Actuator Shaft Dimensions [mm (in.)]	Shaft Type	Cat. No.			
					M20 Conduit		Connector[1]	
Safety	Auxiliary				M16	1/2 inch NPT Adapter	6-pin Micro (M12)	Connect to ArmorBlock Guard I/O 5-pin Micro[2]
3 N.C.	–	–	80 x Ø10 (3.14 x 0.39)	Solid	440H-E22025	440H-E22050	440H-E22059	–
			60 x Ø8 (2.36 x 0.31)		440H-E22031	440H-E22051	440H-E22060	–
			50 x Ø10 (1.96 x 0.39)		440H-E22047	440H-E22052	440H-E22061	440H-E2NNPPS
			30 x Ø16 (1.18 x 0.63) bore Ø9.5 (0.37)	Pre-bored	440H-E22067	440H-E22068	440H-E22069	440H-E2NNHPS
2 N.C.	1 N.O.	BBM	80 x Ø10 (3.14 x 0.39)	Solid	440H-E22027	440H-E22053	440H-E22037	–
			60 x Ø8 (2.36 x 0.31)		440H-E22033	440H-E22054	440H-E22039	–
			50 x Ø10 (1.96 x 0.39)		440H-E22048	440H-E22055	440H-E22062	–
			30 x Ø16 (1.18 x 0.63) bore Ø9.5 (0.37)	Pre-bored	440H-E22064	440H-E22065	440H-E22066	
		MBB	80 x Ø10 (3.14 x 0.39)	Solid	440H-E22029	440H-E22056	440H-E22038	
			60 x Ø8 (2.36 x 0.31)		440H-E22035	440H-E22057	440H-E22040	
			50 x Ø10 (1.96 x 0.39)		440H-E22049	440H-E22058	440H-E22063	
			30 x Ø16 (1.18 x 0.63) bore Ø9.5 (0.37)	Pre-bored	440H-E22070	440H-E22071	440H-E22072	

(1) For connector ratings, see Table 20 on page 32.
(2) With an 8-pin micro connector, not all contacts are connected. See Typical Wiring Diagrams on page 38 for wiring details.

Table 23 - Connection Systems

Description	Cat. No.	
	6-pin Micro (M12)	5-pin Micro (M12) for ArmorBlock Guard I/O
	3 N.C.-2 N.C. and 1 N.O	3 N.C.
Cordset	889R-F6ECA-x [1]	–
Patchcord	889R-F6ECRM-y [2]	889D-F5ACDM-x [1]
Distribution box	898R-P68MT-A5	–
Shorting plug	898R-61MU-RM	–

(1) *x* = 2 (2 m [6.6 ft]), 5 (5 m [16.4 ft]), or 10 (10 m [32.8 ft]) for standard cable lengths.
(2) *y* = 1 (1 m [3.3 ft]), 2 (2 m [6.6 ft]), 3 (3 m [9.8 ft]), 5 (5 m [16.4 ft]), or 10 (10 m [32.8 ft]) for standard cable lengths.

Approximate Dimensions

Figure 21 - Hinge Interlock Switch [mm (in.)]

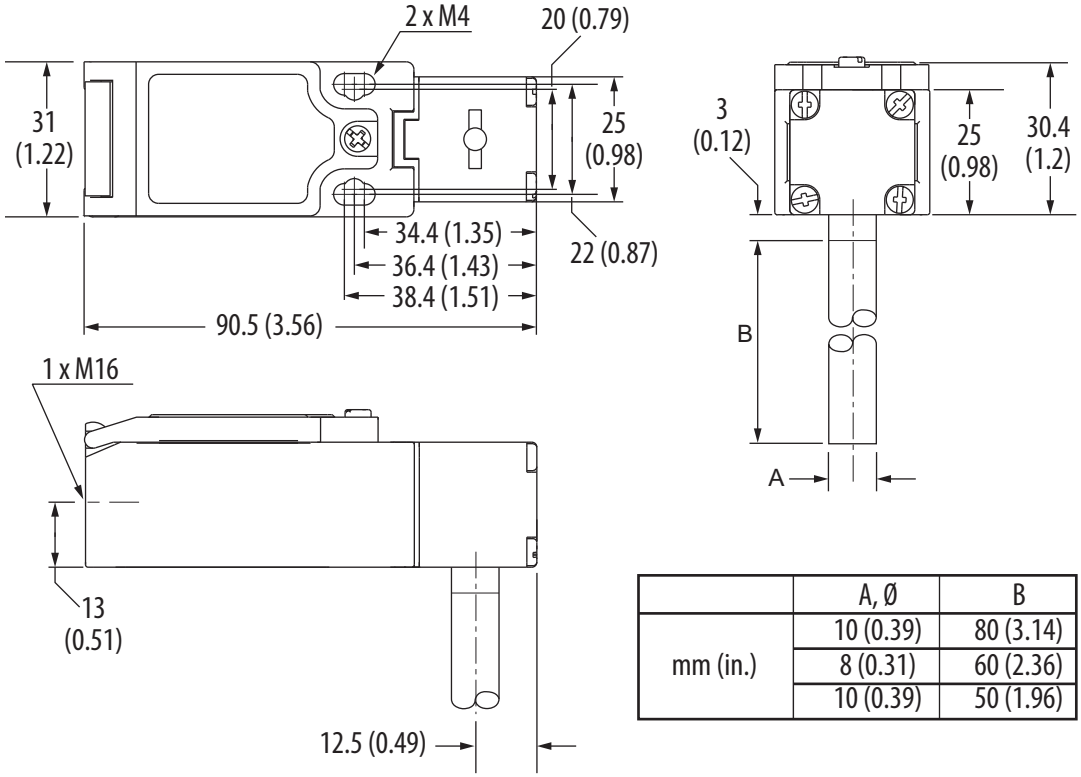

	A, Ø	B
mm (in.)	10 (0.39)	80 (3.14)
	8 (0.31)	60 (2.36)
	10 (0.39)	50 (1.96)

Figure 22 - Hollow Shaft [mm (in.)]

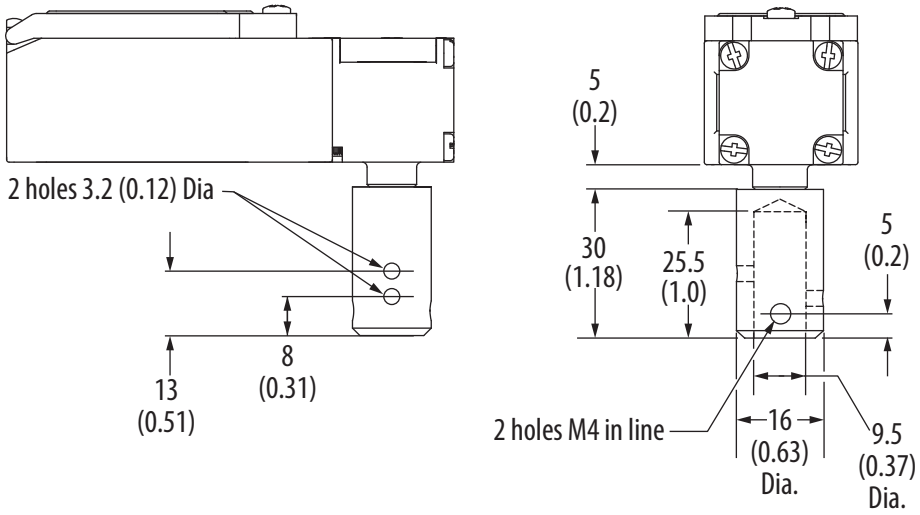

Typical Wiring Diagrams

Figure 23 - Contact Configuration

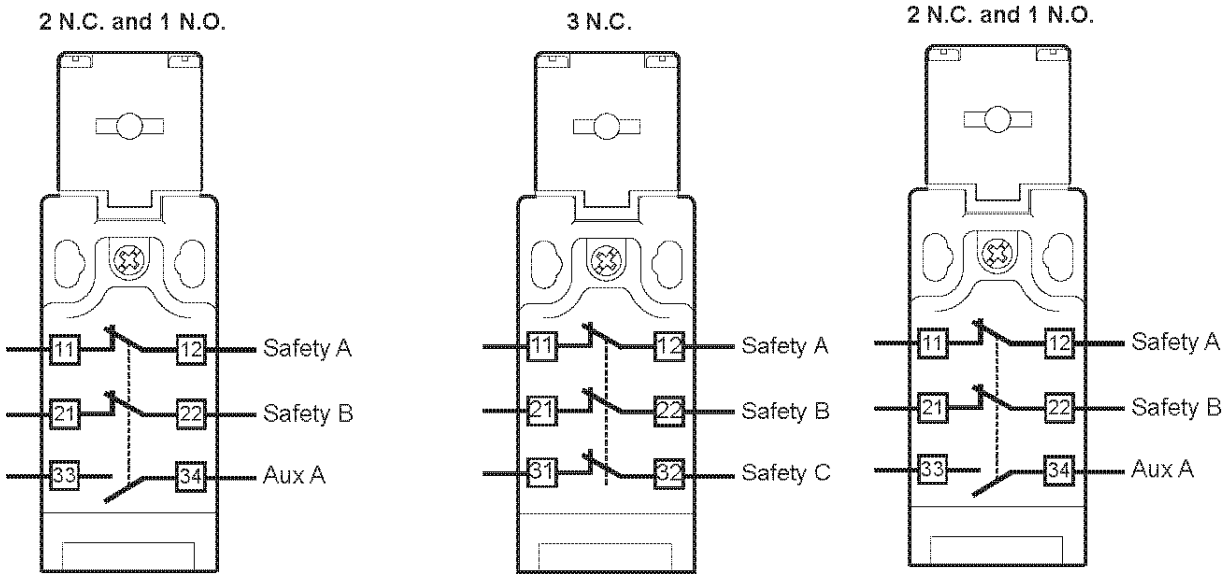

Figure 24 - Contact Action

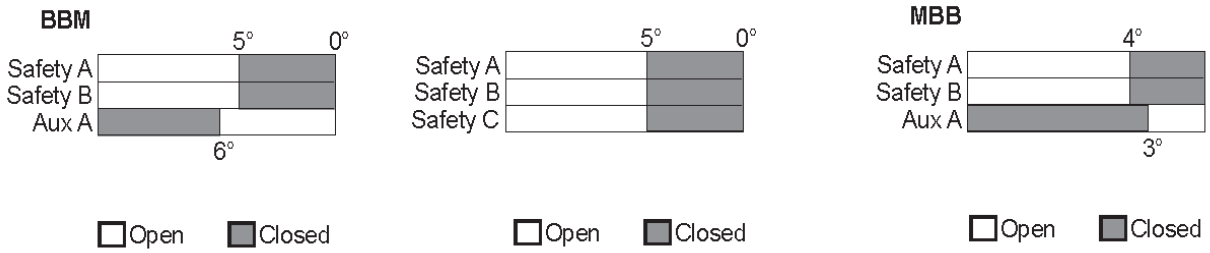

Connections

Table 24 - 5-pin Micro (M12)

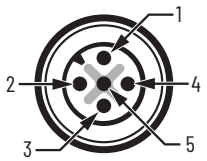

Pin	Standard	ArmorBlock Guard I/O	Function
	Color	Color	
1	Brown	Red/White	Safety A
2	White	Red	Safety A
3	–	Green	–
4	Blue	Red/Yellow	Safety B
5	Black	Red/Black	Safety B

Recommended standard 5-pin cordset: 889D-F4AC-x
Recommended 5-pin cordset for ArmorBlock Guard I/O: 889R-F6ECA-x
x = 2 (2 m [6.6 ft]), 5 (5 m [16.4 ft]), or 10 (10 m [32.8 ft]) for standard cable lengths.

Table 25 - 6-pin Micro (M12)

Pin	Color	Function	
1	Red/White	Safety A	Safety A
2	Red	Safety B	Safety B
3	Green	Aux A	Safety C
4	Red/Yellow	Aux A	Safety C
5	Red/Black	Safety A	Safety A
6	Red/Blue	Safety B	Safety B

Recommended 5-pin cordset: 889R-F5ECA-x
x = 2 [2 m (6.6 ft)], 5 [5 m (16.4 ft)], or 10 [10 m (32.8 ft)] for standard cable lengths.

Rotacam Heavy-duty Hinge Interlock Switches

The Rotacam™ heavy-duty hinge interlock switches have the following features:

- Can be used as a hinge pin on light- and medium-weight guard doors
- Isolates power within 5° of door movement
- Degree of operation can be customized with adjustable cam
- Robust die-cast case, ideal for heavy-duty applications
- Contacts, 2 N.C. and 1 N.O.

Specifications

Attribute	Rotacam Heavy-duty Hinge Interlock Switches			
Safety Ratings				
Standards	ISO 14119, 60947-5-1			
Safety classification	Dual channel interlocks suitable for use in Category 3 or Category 4 systems.			
Functional Safety Data (related to safety contacts) (1)	B10d: > 2 x 10^6 operations at minimum load PFH_D: < 3 x10^{-7} MTTFd: > 385 years Can be suitable for use in Performance Level PLe or PLd systems (according to ISO 13849-1) and for use in SIL 2 or SIL 3 systems (according to IEC 62061) depending on the architecture and application characteristics			
Certifications	CE Marked for all applicable EU directives, UKCA Marked for all applicable regulations, cULus Listed, SUVA, TÜV Certified rok.auto/certifications			
Operating Characteristics				
Break contact force, min	0.08 N•m (0.7 lb•in) (torque on shaft)			
Actuation speed, max [mm/s (in/s)]	160 (6.29)			
Actuation frequency, max	1 cycle/s			
Mechanical life	1,000,000 operations			
Utilization Category				
A600/AC-15 (Ue)	600V	500V	240V	120V
A600/AC-15 (Ie)	1.2 A	1.4 A	3 A	6 A
DC-13 (Ue)	24V	—	—	—
DC-13 (Ie)	2 A	—	—	—
Outputs				
Safety contacts(2)	2 N.C. direct opening action			
Auxiliary contacts	1 N.O.			
Shaft rotation for contact operation	11° max, 5° min (adjustable)			
Thermal current/$_{Ith}$	10 A			
Rated Insulation voltage (U_i)	500V			
Switching current at voltage, min	3 mA at 18V DC			
Environmental				
Enclosure type rating	IP66			
Operating temperature [°C (°F)]	-20...+80 (-4...+176)			
General				
Material	• Housing: Heavy-duty die-cast alloy • Actuator: Stainless steel			
Weight	420 g (0.926 lb)			
Color	Red			

(1) Usable for ISO 13849-1 and IEC 62061. Data is based on the B10d value that is given and:
—Usage rate of 1op/10min, 24hr/day, 360 days/year, which represents 51,840 operations per year.
—Mission time/Proof test interval of 38 years.

(2) The safety contacts are described as normally closed (N.C.) for example: with the guard closed, the actuator in place (where relevant), and the machine able to be started.

Product Selection

Contact		Action	Actuator Shaft Dimensions [mm (in.)]	Shaft Type	Cat. No.		
					M20 Conduit		Connector[1]
Safety	Auxiliary				M20	1/2 inch NPT Adapter	8-pin Micro (M12)
2 N.C.	1 N.O.	BBM	85 x Ø12.7 (3.35 x 0.5)	Solid	440H-R03079	440H-R03088	440H-R03112
			30x Ø16 (1.18 x 0.63)	Pre-bored	440H-R03074	440H-R03078	440H-R03111

(1) For connector ratings, see Table 20 on page 32.

Table 26 - Connection Systems

Description	Cat. No.
	8-pin Micro (M12) 2 N.C. and 1 N.O.
Cordset	889D-F8AB-*x* [1]
Patchcord	889D-F8ABDM-*y* [2]

(1) *x* = 2 (2 m [6.6 ft]), 5 (5 m [16.4 ft]), or 10 (10 m [32.8 ft]) for standard cable lengths.
(2) *y* = 1 (1 m [3.3 ft]), 2 (2 m [6.6 ft]), 3 (3 m [9.8 ft]), 5 (5 m [16.4 ft]), or 10 (10 m [32.8 ft]) for standard cable lengths.

Approximate Dimensions

Figure 25 - Hinge Interlock Switch [mm (in.)]

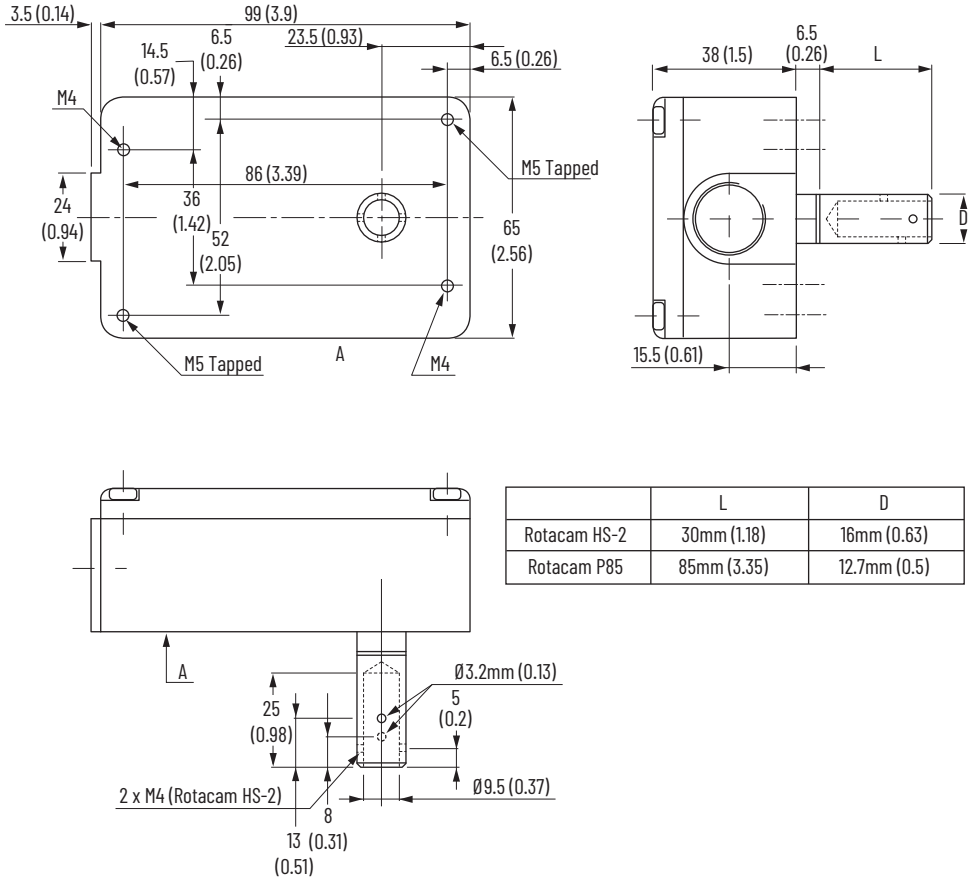

	L	D
Rotacam HS-2	30mm (1.18)	16mm (0.63)
Rotacam P85	85mm (3.35)	12.7mm (0.5)

Typical Wiring Diagrams

Figure 26 - Contact Configuration

2 N.C. and 1 N.O.

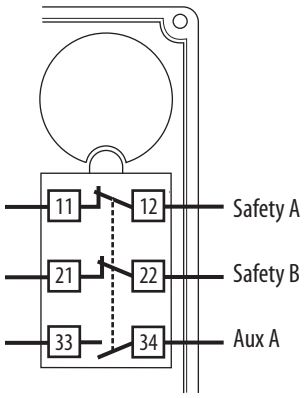

Table 27 - 8-pin (M12)

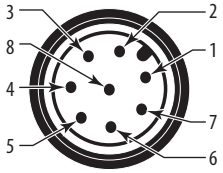

Pin	Color	Description
1	White/Blue	Safety A
2	–	–
3	Green/Yellow	Aux A
4	Green/Yellow	Aux A
5	Gray/Pink	Safety B
6	Gray/Pink	Safety B
7	White/Blue	Safety A
8	Red	Ground

Recommended 5-pin cordset: 889D-F8AB-x
x = 2 [2 m (6.6 ft)], 5 [5 m (16.4 ft)], or 10 [10 m (32.8 ft)] for standard cable lengths.

Notes:

440G-EZ Electromagnetic Safety Switches

The 440G-EZ electromagnetic safety switches have the following features:

- Process and machine protection per ISO 14119
- Certified to PLe per ISO 13849-1 (for door position monitoring)
- Non-contact interlocking device with a Power to Lock (PTL) electromagnetic locking function for process protection
- Switches can be connected in series
- Sensor can be mounted in either a surface mount or a flush mount
- Ease of installation and alignment; no tongue interlocks
- Increased efficiency and productivity by minimized downtime
- Reduced long-restart delays
- Status indicators for switch and lock status
- High tolerance to door offset within 5 mm (0.2 in.) in all directions
- Reduced accumulation of scrap

Specifications

Attribute	440G-EZS21STL05J, 440G-EZS21STL05H, 440G-EMAS
Safety Ratings	
Standards	ISO 14119, IEC 60947-5-3, ISO 13849-1, IEC 62061
Safety classification: Guard position sensing	Type 4 interlocking device with guard locking per ISO 14119 PLe category 4 per ISO 13849-1 and SIL 3 per IEC 62061
Functional Safety Data (door position monitoring)	PFH: 1.5 x 10-8 (EN ISO 13849). Mission time/PTI: 20 years
Certifications	CE marked for all applicable EU directives, UKCA Marked for all applicable regulations, cULus (UL508) Listed, TÜV Certified, RCM rok.auto/certifications
Operating Characteristics	
Safe switch on distance [mm (in.)]	4 (0.16)
Typical switch on distance [mm (in.)]	15 (0.59)
Safe switch off distance [mm (in.)]	45 (1.77)
Holding force	500 N
Retaining force	25 N
Actuation frequency, max	0.5 Hz
Alignment tolerance for locking device [mm (in.)]	• Vertical: 5 (0.2) • Horizontal: 5 (0.2)
Aperture angle	3°
Offset tolerance [mm (in.)]	5 (0.2)
Rated voltage	24V DC
Insulation voltage (U_i)	32V
Rated impulse withstand voltage (U_{imp})	1.5 kV
Supply voltage when an individual safety switch is connected	24V DC (19.2...28.8 V DC)
Supply voltage UV when a cascade is connected	• Sensor: 24V DC (22.8...28.8 V DC) • Magnet: 24V DC (21.6...28.8 V DC)
Power consumption	• Locking active: 350 mA • Locking deactivated: 50 mA
Switching frequency	≤0.5 Hz

Attribute	440G-EZS21STL05J, 440G-EZS21STL05H, 440G-EMAS
Type of output	OSSD
Output current, max	≤100 mA
Diagnostic output	≤25 mA, short-circuit protected
Cable capacitance	400 nF (for OUT A and OUT B)
Response time	50 ms
Enable time	100 ms
Risk time	100 ms
Power up delay	2.5 s
Muting time when supply voltage is interrupted	4 ms
Environmental	
Operating temperature [°C (°F)]	-20...+55 (-4...+131)
Storage temperature [°C (°F)]	-25...+55 (-4...+131)
Relative humidity	50% at 70C (IEC 60947-5-2)
Enclosure ingress rating	IP67
Shock and vibration	IEC EMC: EN IEC 61326-3-1, EN IEC 60947-5-2, EN IEC 60947-5-3
Outputs	
Safety outputs	2 x OSSDs, 2 x PNP, max 100 mA, short-circuit protected and overload-proof
Auxiliary output	25 mA max, short-circuit protected (resistive load)
Switching voltage	• ON State: 19.2...28.8 V DC • OFF State: 0...2 V DC
Switching current	• ON State: ≤100 mA • OFF State: ≤500 µA
Shock and vibration	300 µs
Physical Characteristics	
Material	• Sensor: Anodized aluminum • Actuator: Fiberglass-reinforced PVC • Anchor plate: Nickel-plated steel
Weight	• Sensor: 510 g (18 oz) • Actuator: 210 g (7.4 oz)

Product Selection

Description	Cat. No.
5-pin electromagnetic safety switch	440G-EZS21STL05J
8-pin electromagnetic safety switch	440G-EZS21STL05H

Accessories

Description	Cat. No.
Replacement actuator	440G-EMAS

Approximate Dimensions

Figure 27 - Actuator [mm (in.)]

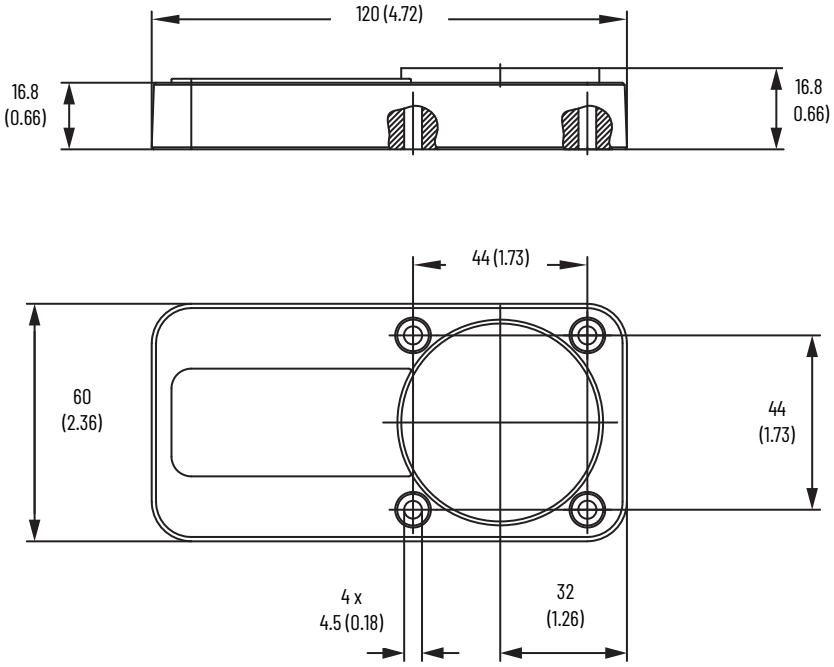

Figure 28 - Sensor [mm (in.)]

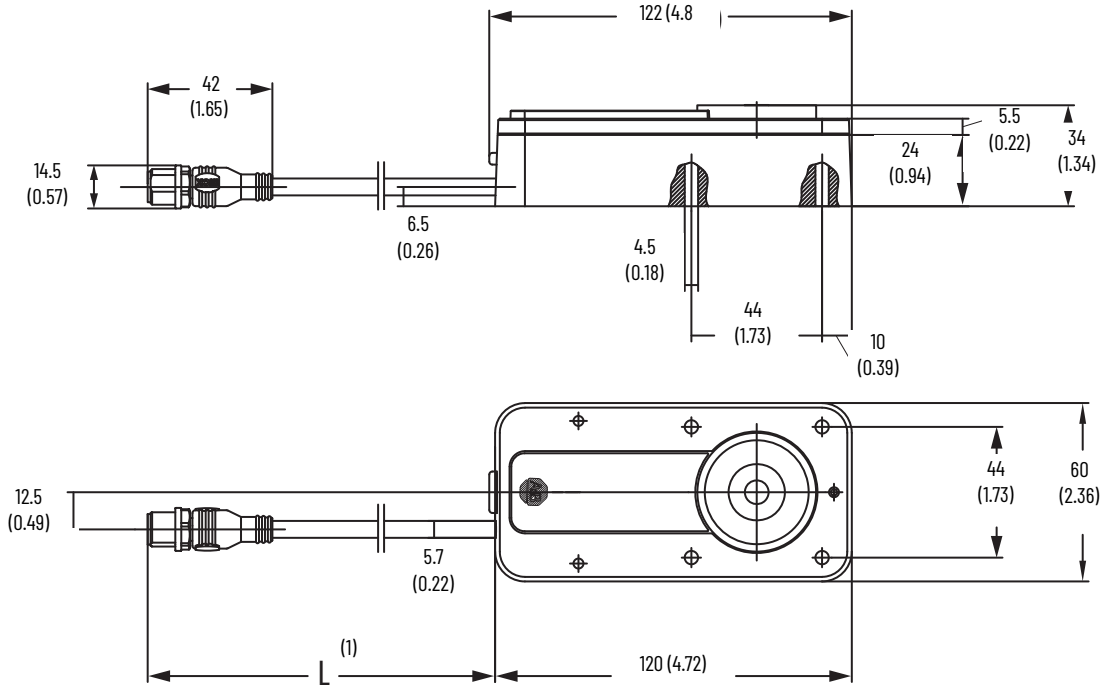

(1) L = 150±2 mm (5.91±0.79 in.)

Typical Wiring Diagrams

Table 28 - M12 5-pin, A-coded Plug

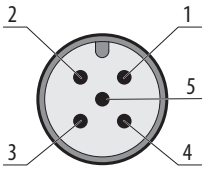

Pin	Color (1)	Designation	Description
1	Brown	+24V DC	Safety switch voltage supply
2	White	OSSD 1	OSSD 1 output
3	Blue	0V	0V DC voltage supply
4	Black	OSSD 2	OSSD 2 output
5	Gray	Magnet	Magnet activation 24V DC

(1) Applies to the extension cables recommended as accessories.

IMPORTANT Pay attention to the tightness of the plug connector.

Table 29 - M12 8-pin, A-coded Plug

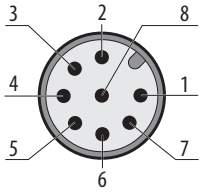

Pin	Color (1)	Designation	Description
1	White	Aux	Application diagnostic output (not safe)
2	Brown	+24V DC	Safety switch voltage supply
3	Green	Magnet	Magnet activation 24V DC
4	Yellow	In 2	OSSD 2 input (2)
5	Gray	OSSD 1	OSSD 1 output
6	Pink	OSSD 2	OSSD 2 output
7	Blue	0V	0V DC voltage supply
8	Red	In 1	OSSD 1 input

(1) Applies to the extension cables recommended as accessories.
(2) When used as an individual safety switch or as the first safety switch in a cascade apply 24V DC.

IMPORTANT Pay attention to the tightness of the plug connector.

SensaGuard Non-contact Interlock Switches

The SensaGuard™ non-contact interlock switches have the following features:

- Category 4, SIL 3 rated switch, TÜV functional safety approved to IEC 61508
- Switches can be connected to a standard safety relay, for example, the MSR126, MSR127, SmartGuard™, and Safety I/O Blocks
- Multiple actuator sizes for large sensing distance
- IP69K environmental rating
- Short-circuit and overvoltage protection
- Status indicator on the switch for door status and troubleshooting
- Unique coded version
  - Automatic learn process at unit power-up
  - During commissioning, you can select if the sensor can learn a new actuator up to eight times or lock the unit so it cannot learn another actuator
- Integrated latch version
  - Adjustable magnetic force 15...45 N
  - Designed for easy mounting on aluminum profile

The SensaGuard non-contact interlock switches offer the following benefits:

- No dedicated controller required
- Cat 4, SIL 3 rating maintained even with multiple units connected in series
- Switches can be connected in series with other devices (light curtain, E-stops, key interlock switches)
- Extended diagnostics for easy troubleshooting
- Large sensing distances
- Tolerance to misalignment
- Multiple sensing directions
- Stainless-steel version suitable for use in harsh environments
- Use standard proximity brackets

Specifications

Attribute	SensaGuard Non-contact Interlock Switches
Safety Ratings	
Standards	ISO 14119, IEC 60947-5-3, IEC 61508, ISO 13849-1,
Safety classification	Type 4 Interlocking Device per ISO 14119 (Unique/High and Standard/Low Coding), PLe category 4 per ISO 13849-1
Functional safety data	See Rockwell Automation Functional Safety Data Sheet, publication SAFETY-SR001
Certifications	cULus (UL 508) Listed, TÜV Certified, UKCA Marked for all applicable regulations, CE Marked for all applicable EU directives rok.auto/certifications
Outputs (Guard Door Closed, Actuator in Place)	
Safety outputs	2 x PNP, 0.2 A, max; Status: ON (+24V DC)
Auxiliary outputs	1 x PNP, 0.2 A max; Status: OFF (0V DC)
Operating Characteristics	
Assured sensing distance [mm (in.)]	• 18 (0.71) plastic barrel/18 (0.71) target: 15 (0.59) • 18 (0.71) plastic barrel/30 (1.18) target: 25 (0.98) • 18 (0.71) stainless steel barrel/standard target: 10 (0.39) • Large rectangular flat pack/standard target: 15 (0.59)
Misalignment tolerance, min	See Magnetically Coded Non-contact Interlock Switches on page 51
Repeat accuracy	10% of Sensing Range
Output current, max	200 mA (all outputs)

Attribute	SensaGuard Non-contact Interlock Switches
Operating voltage	24V DC, +10%/-15%; Class 2
Current consumption	50 mA
Frequency of operating cycle	1 Hz
Response time (off)	54 ms
Environmental	
Enclosure type rating	NEMA 3, 4X, 12, 13, IP69K
Operating temperature [°C (°F)]	-10...+55 (14...131)
Relative humidity	5...95%
Shock	IEC 68-2-27, 30 g, 11 ms
Vibration	IEC 68-2-6 10...55 Hz
Radio frequency	IEC 61000-4-3, IEC 61000-4-6
Physical Characteristics	
Material	• Housing: VALOX DR 48 • Actuator: VALOX DR 48
Color	Red

Product Selection

Type	Assured Sensing Distance [mm (in.)]	Light-emitting Diode (LED) Door Indication/ Diagnostic	Margin Indication	Magnetic Hold	Actuator Code Type	Cat. No.			
						Cable		Connector	
						3 m (9.8 ft)	10 m (32.8 ft)	6 in. (152.4 in.) Pigtail, 8-pin Micro (M12)	6 in. (152.4 in.) Pigtail, 5-pin Micro (M12)
18 mm (0.71 in.) plastic barrel/ 18 mm (0.71 in.) actuator	15 (0.59)	Yes	—	—	Standard	440N-Z21S16A	440N-Z21S16B	440N-Z21S16H	440N-Z21S16J
					Unique	440N-Z21U16A	440N-Z21U16B	440N-Z21U16H	440N-Z21U16J
18 mm (0.71 in.) plastic barrel/ 30 mm (1.18 in.) actuator	25 (0.98)	Yes	—	—	Standard	440N-Z21S26A	440N-Z21S26B	440N-Z21S26H	440N-Z21S26J
					Unique	440N-Z21U26A	440N-Z21U26B	440N-Z21U26H	440N-Z21U26J
18 mm (0.71 in.) stainless-steel barrel/ 18 mm stainless-steel actuator	10 (0.39)	Yes	—	—	Standard	440N-Z21S17A	440N-Z21S17B	440N-Z21S17H	440N-Z21S17J
					Unique	440N-Z21U17A	440N-Z21U17B	440N-Z21U17H	440N-Z21S17J
Plastic rectangular/ rectangular actuator	15 (0.59)	Yes	—	—	Standard	440N-Z21SS2A	440N-Z21SS2B	440N-Z21SS2H	440N-Z21SS2J
					Unique	440N-Z21US2A	440N-Z21US2B	440N-Z21US2H	440N-Z21US2J
			Yes	—	Standard	440N-Z21SS2AN	440N-Z21SS2BN	440N-Z21SS2HN	440N-Z21SS2JN
					Unique	440N-Z21US2AN	440N-Z21US2BN	440N-Z21US2HN	440N-Z21US2JN
			Yes	Yes (9 N)	Standard	440N-Z21SS2AN9	440N-Z21SS2BN9	440N-Z21SS2HN9	440N-Z21SS2JN9
					Unique	440N-Z21US2AN9	440N-Z21US2BN9	440N-Z21US2HN9	440N-Z21US2JN9
Plastic housing with integrated latch	Contact/ latched	Yes	—	Adjustable 20...60 N	Standard	440N-Z21SS3PA	440N-Z21SS3PB	440N-Z21SS3PH	440N-Z21SS3PJ
					Unique	440N-Z21SU3PA	440N-Z21SU3PB	440N-Z21SU3PH	440N-Z21SU3PJ

Table 30 - Connection Systems

Description		Cat. No.
Cordset	5-pin	889D-F5AC-*x* (1)
	8-pin	889D-F8AB-*x* (1)
Patchcord	4-pin	889D-F4ACDM-*y* (2)
	5-pin	889D-F5ACDM-*y* (2)
	8-pin	889D-F8ABDM-*y* (2)
Safety wired t-port		898D-438Y-D8
Safety wired shorting plug		898D-418U-DM
Safety wired shorting plug, 4-pin		898D-41KU-DM

(1) *x* = 2 (2 m [6.6 ft]), 5 (5 m [16.4 ft]), or 10 (10 m [32.8 ft]) for standard cable lengths.
(2) *y* = 1 (1 m [3.3 ft]), 2 (2 m [6.6 ft]), 3 (3 m [9.8 ft]), 5 (5 m [16.4 ft]), or 10 (10 m [32.8 ft]) for standard lengths.

Accessories

Table 31 - Interlock Switch Accessories

Description		To Be Used With	Cat. No.
	18 mm (0.71 in.) plastic actuator (Series A)	Standard coded models only	440N-Z18PT
		Unique coded models only	440N-Z18UPT
	18 mm (0.71 in.) plastic actuator (Series B)	Standard coded models only	440N-Z18PTB
		Unique coded models only	440N-Z18UPTB
	30 mm (1.18 in.) plastic actuator (Series A)	Standard coded models only	440N-Z30PT
		Unique coded models only	440N-Z30UPT
	30 mm (1.18 in.) plastic actuator (Series B)	Standard coded models only	440N-Z30PTB
		Unique coded models only	440N-Z30UPTB
	18 mm (0.71 in.) stainless-steel actuator (Series A)	Standard coded models only	440N-Z18SST
		Unique coded models only	440N-Z18USST
	18 mm (0.71 in.) stainless-steel actuator (Series B)	Standard coded models only	440N-Z18SSTB
		Unique coded models only	440N-Z18USSTB
	Rectangular plastic actuator (Series A)	Standard coded models only	440N-ZPREC
		Unique coded models only	440N-ZUPREC
		Standard coded margin/magnetic hold models only	440N-ZPRECM
		Unique coded margin/magnetic hold models only	440N-ZUPRECM
		Standard coded margin indication models	440N-ZPRECM
		Unique coded margin indication models	440N-ZUPRECM
	Regular plastic integrated latch actuator (Series B)	Standard coded models	440N-ZLPRECB
		Unique coded models	440N-ZULPRECB

Table 31 - Interlock Switch Accessories (Continued)

Description		To Be Used With	Cat. No.
	Rectangular plastic actuator (Series B)	Standard coded models only	440N-ZPRECB
		Unique coded models only	440N-ZUPRECB
		Standard coded margin/magnetic hold models only	440N-ZPRECMB
		Unique coded margin/magnetic hold models only	440N-ZUPRECMB
		Standard coded margin indication models	440N-ZPRECM1B
		Unique coded margin indication models	440N-ZUPRECM1B
	Mounting bracket for tubular proximity sensors—right angle style	18 mm (0.71 in.) barrel models	871A-BRS18
	Mounting bracket for tubular sensors—clamp style		871A-BP18
	Snap clamp mounting bracket		871A-SCBP18
	18 mm (0.71 in.) mounting bracket		60-2649
	Mounting plate for vertically hinged doors	Integrated latch version only	440N-AHDB
	Mounting plate for slide and gull wing doors		440N-ASDB
	Mounting bracket for tubular proximity sensors—right angle style	18 mm (0.71 in.) barrel models	871A-BRS18

Approximate Dimensions

Figure 29 - 18 mm (0.71 in.) Barrel [mm (in.)]

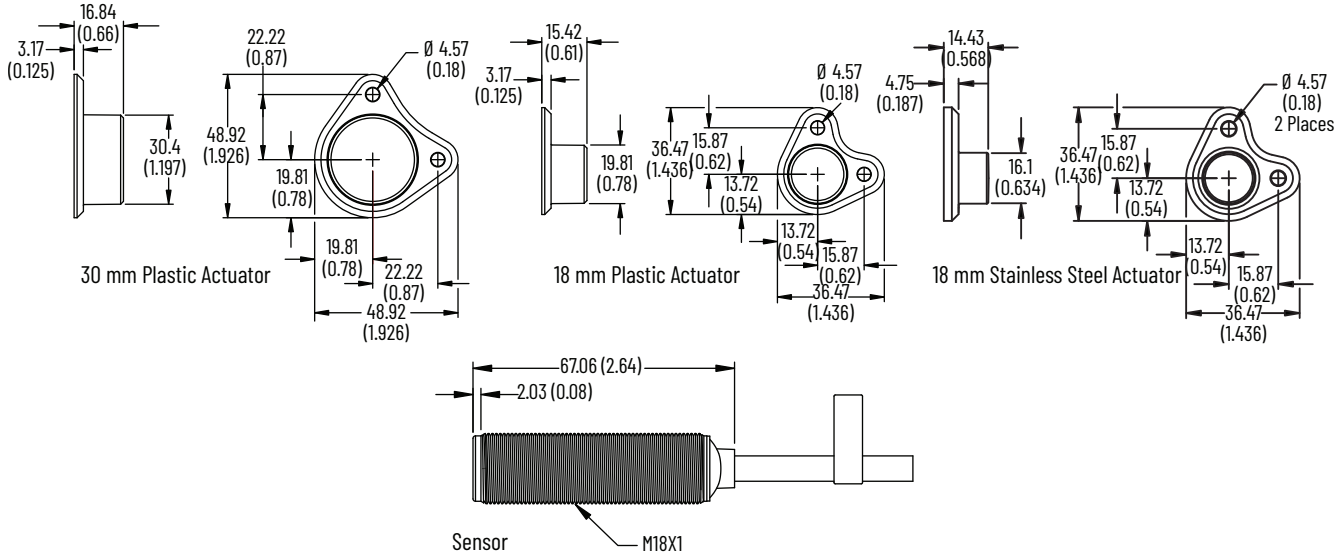

Figure 30 - Large Rectangular Flat Pack [mm (in.)]

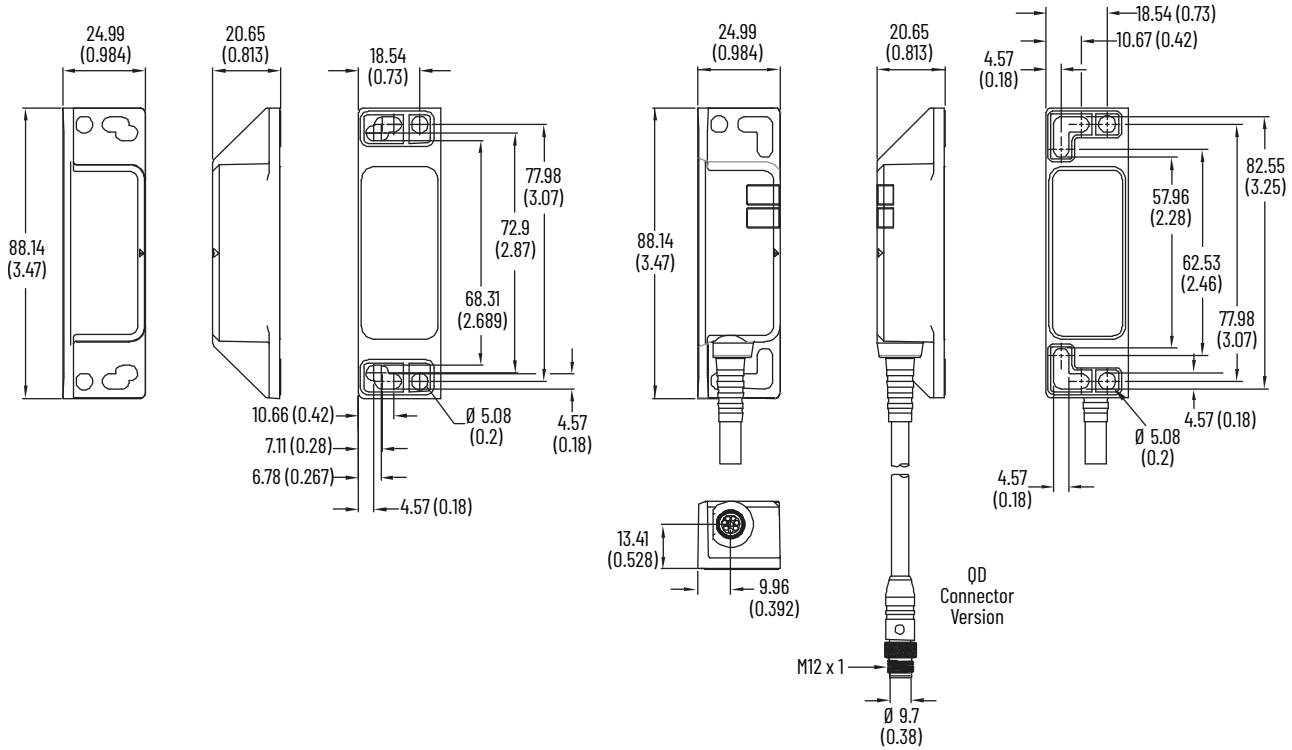

Figure 31 - Integrated Latch [mm (in.)]

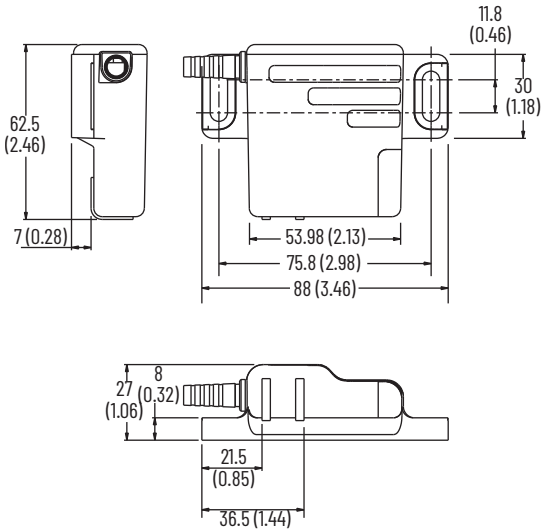

Typical Wiring Diagrams

Table 32 - Plastic/Stainless-steel 8-pin Micro (M12)

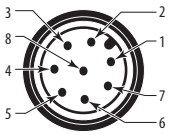

Pin	Color	Signal
1	White	Aux A
2	Brown	24V DC +
3	Green	–
4	Yellow	Safety B+
5	Gray	Safety A
6	Pink	Safety B
7	Blue	Gnd
8	Red	Safety A+

Recommended 5-pin cordset: 889D-F8AB-x
x = 2 [2 m (6.6 ft)], 5 [5 m (16.4 ft)], or 10 [10 m (32.8 ft)] for standard cable lengths.

Table 33 - 5-pin Micro (M12)

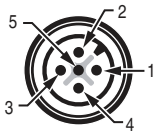

Pin	Color	Signal
1	Brown	+24V
2	White	Safety OSSD 1 output
3	Blue	0V
4	Black	Safety OSSD 2 output
5	Gray	Auxiliary output

Magnetically Coded Non-contact Interlock Switches

The magnetically coded non-contact interlock switches have the following features:

- Non-contact actuation
- Magnetically coded sensing
- High tolerance to misalignment
- Designed for use with specified controllers

Specifications

Attribute	Magnetically Coded Non-contact Interlock Switches
Safety Ratings	
Standards	ISO 14119, IEC 60947-5-3, ISO 13849-1, IEC 62061
Safety classification	Type 4 Interlocking Device with low coding per ISO 14119
Functional safety data	See Rockwell Automation Functional Safety Data Sheet, publication SAFETY-SR001
Certifications	cULus Listed, TÜV Certified, UKCA Marked for all applicable regulations, CE Marked for all applicable EU directives rok.auto/certifications
Outputs (Guard Door Closed, Actuator in Place)	
Safety outputs	• MC1: 2 N.C. REEDS • MC2: 2 N.C. solid-state relays
Auxiliary outputs	• MC1: — • MC2: 1 x PNP, 0.2 A max; Status: OFF (0V DC)
Operating Characteristics	
Operating distance, make [mm (in.)]	• MC1: 8 (0.3) • MC2: 10 (0.39)
Operating distance, break [mm (in.)]	• MC1: 15 (0.59) • MC2: 25 (0.98)
Repeat accuracy	10% of sensing range
Output current, max	200 mA
Switching current at voltage	• MC1: 24V DC at 200 mA, max • MC2: 24V DC at 200 mA +10%/-15%, max
Operating voltage/power supply	• MC1: — • MC2: 24V DC, +10%/-15%/50 mA max/Class 2 SELV
Frequency of operating cycle	1 Hz
Environmental	
Enclosure type rating	MC1: IP67 (NEMA 6P) MC2: IP69K
Operating temperature [°C (°F)]	-10...+55 (14...131)
Relative humidity	5...95%
Shock	IEC 68-2, 27, 30 g, 11 ms
Vibration	IEC 68-2-6, 10...55 Hz
Radio frequency	IEC 61000-4-3, IEC 61000-4-6
Physical Characteristics	
Material	MC1 • Housing: Molded ABS • Actuator: Molded ABS MC1 • Housing: Ultradur • Actuator: Ultradur
Color	Red

Product Selection

Type	Operating Voltage/ Input Current	Safety Outputs	Auxiliary Outputs	Status Indicator	Connection	Cat. No.
MC1	–	2 N.C. REEDS	–	No	4-pin Micro (M12)	440N-Z2NRS1C
					3 m (9.8 ft) cable	440N-Z2NRS1A
					10 m (32.8 ft) cable	440N-Z2NRS1B
MC2	24V DC, +10%/ 15%/50 mA, max	2 N.C. solid-state relays	1 x PNP, 0.2 A max; Status: OFF (0V DC)	Yes	8-pin Micro (M12)	440N-Z21W1PH
					3 m (9.8 ft) cable	440N-Z21W1PA
					10 m (32.8 ft) cable	440N-Z21W1PB

Table 34 - Connection Systems

Description	Cat. No.	
	Connection to Distribution Box 4-pin Micro (M12) 2 N.C.	8-pin Micro (M12) 2 N.C. and 1 N.O.
Cordset	889D-F4AC-x (1)	889D-F8AB-x (1)
Patchcord	889D-F4ACDM-y (2)	889D-F8ABDM-y (2)
Distribution box	898D-4zLT-DM4 (3)	–
Shorting plug	898D-41LU-DM	–
T-port	898D-43LY-D4	–

(1) Replace *x* with 2 (2 m [6.6 ft]), 5 (5 m [16.4 ft]), or 10 (10 m [32.8 ft]) for standard cable lengths.
(2) Replace *y* with 1 (1 m [3.3 ft]), 2 (2 m [6.6 ft]), 3 (3 m [9.8 ft]), 5 (5 m [16.4 ft]), or 10 (10 m [32.8 ft]) for standard cable lengths.
(3) Replace *z* with 4 or 8 for number of ports.

Accessories

Description	Cat. No.
MC1 spare actuator	440N-A17233
MC2 spare actuator	440N-A32114

Approximate Dimensions

Figure 32 - MC1 [mm (in.)]

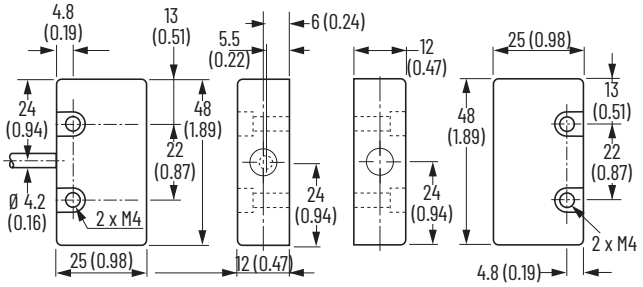

Figure 33 - MC2 [mm (in.)]

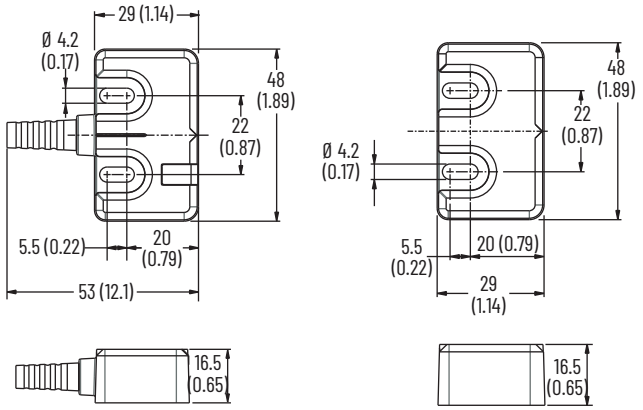

Typical Wiring Diagrams

Description		MC1 — 2 N.C.	MC2 — 2 N.C. and 1 N.O.
4-pin Micro (M12) 	1 and 3	Safety A	—
	2 and 4	Safety B	
8-pin Micro (M12) 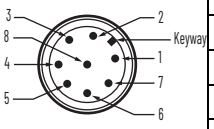	1	—	Aux A
	2		Power+
	3		—
	4		Safety B+
	5		Safety A
	6		Safety B
	7		Ground
	8		Safety A+
Cordset 889D-F4AC-*x* or cable version (1)	Brown	Safety A	—
	Blue		
	White	Safety B	—
	Black		
8-pin Cordset 889D-F8AB-*x* or cable version (1)	Gray	—	Safety A
	Red		
	Pink		Safety B
	Yellow		
	White		Aux
	Brown		24V DC +
	Blue		Ground
	Green		—

(1) *x* = 2 (2 m [6.6 ft]), 5 (5 m [16.4 ft]) or 10 (10 m [32.8 ft]) for standard cable lengths.

Ferrogard 1, 2, 20, and 21 Non-contact Interlock Switches

The Ferrogard™ 1, 2, 20, and 21 non-contact interlock switches have the following features:

- Non-contact actuation
- High tolerance to misalignment
- High switching current (up to 2 A AC, 1 A DC)
- Plastic rectangular housing (IP67)
- Cable or quick-disconnect (QD) connections

Specifications

Attribute	Ferrogard 1, 2, 20, and 21 Non-contact Interlock Switches
Safety Ratings	
Standards	ISO 14119, IEC 60947-5-3, ISO 13849-1, IEC 62061
Safety classification	Cat. 1 Device per ISO13849-1. Dual channel interlocks suitable for Cat. 3 or 4 systems
Functional safety data	B10d: > 2 x 10^6 operations Dual channel interlock can be suitable for Performance Level PLe or PLd (according to ISO 13849-1) and for use in SIL 2 or SIL 3 systems (according to IEC 62061) depending on application characteristics
Certifications	CE Marked for all applicable EU directives, UKCA Marked for all applicable regulations rok.auto/certifications
Outputs (Guard Door Closed, Actuator in Place)	
Safety outputs	• FRS1: 1 N.C. • FRS2: 1 N.C. • FRS20: 2 N.C. • FRS21: 2 N.C.
Auxiliary outputs	• FRS1: None • FRS2: 1 N.O. • FRS20: None • FRS21: 1 N.O.
Operating Characteristics	
Operating distance, make [mm (in.)]	• Safety: 12 (0.47) • Auxiliary: 15 (0.59)
Operating distance, break [mm (in.)]	• Safety: 23 (0.91) • Auxiliary: 26 (1.02)
Fuses, external	• FRS1, 2 and 21: 1.6 A (Bussmann BK/60 A-1.6 A) max • FRS20: 0.4 A (Bussmann BK/60 A-400 mA) max
Environmental	
Enclosure type rating	IP67 (NEMA 6P)
Operating temperature [°C (°F)]	-10...+55 (14...131)
Relative humidity	5...95%
Shock	50 g
Vibration	7 g; 50...200 Hz
Radio frequency	IEC 61000-4-3, IEC 61000-4-6
Physical Characteristics	
Material	• Housing: Molded ABS plastic • Actuator: Molded ABS plastic
Weight	FRS 1 • Sensor: 35 g (0.08 lb) • Actuator: 85 g (0.19 lb) FRS 2 • Sensor: 40 g (0.09 lb) • Actuator: 85 g (0.19 lb) FRS 20 • Sensor: 43 g (0.09 lb) • Actuator: 85 g (0.19 lb) FRS 21 • Sensor: 43 g (0.09 lb) • Actuator: 85 g (0.19 lb)
Color	Red

Product Selection

Switching Capability	Safety Contacts[1]	Auxiliary Contacts[1]	Connection	Type	Cat. No.
250V AC, 2 A max	1 N.C.	–	2 m (6.6 ft) cable	FRS 1	440N-G02001
			4 m (13.1 ft) cable		440N-G02004
			6 m (19.7 ft) cable		440N-G02022
			8 m (26.2 ft) cable		440N-G02041
			10 m (32.8 ft) cable		440N-G02015
		1 N.O.	2 m (6.6 ft) cable	FRS 2	440N-G02002
			4 m (13.1 ft) cable		440N-G02014
			6 m (19.7 ft) cable		440N-G02038
			8 m (26.2 ft) cable		440N-G02033
			10 m (32.8 ft) cable		440N-G02019
			15 m (49.2 ft) cable		440N-G02043
			20 m (65.6 ft) cable		440N-G02040
			4-pin Micro QD		440N-G02093
	2 N.C.	–	4-pin Micro QD	FRS 20	440N-G02097
	2 N.C.	1 N.O.	2 m (6.6 ft) cable	FRS 21	440N-G02055
			4 m (13.1 ft) cable		440N-G02061
			6 m (19.7 ft) cable		440N-G02060
			10 m (32.8 ft) cable		440N-G02059
			6-pin AC Micro QD[2]		440N-G02098
24V DC, 1 A	1 N.C.	1 N.O.	2 m (6.6 ft) cable	FRS 2	440N-G02092
			4-pin Micro QD		440N-G02094
	2 N.C.	–	4 m (13.1 ft) cable	FRS 20	440N-G02085
			4-pin Micro QD		440N-G02090
		1 N.O.	2 m (6.6 ft) cable	FRS 21	440N-G02058
			4 m (13.1 ft) cable		440N-G02077
			6 m (19.7 ft) cable		440N-G02083
			6-pin AC Micro QD		440N-G02099

(1) Contacts are described with the guard door closed, that is, the actuator in place. Switch is shipped complete with actuator.
(2) For connector ratings, see Table 36.

Table 35 - Connection Systems

Description	Cat. No.	
	Connection to Distribution Box 4-pin Micro (M12) 1 N.C. and 1 N.O.	6-pin AC Micro (M12) 2 N.C. and 1 N.O.
Cordset	889D-F4AC-*x* [1]	889R-F6ECA-*x* [1]
Patchcord	889D-F4ACDM-*y* [2]	889R-F6ECRM-*y* [2]
Distribution box	898D-4*z*KT-DM4 [3]	898R-P68MT-A5
Shorting plug	898D-41KU-DM	898R-61MU-RM
T-port	898D-43KY-D4	–

(1) *x* = 2 (2 m [6.6 ft]), 5 (5 m [16.4 ft]), or 10 (10 m [32.8 ft]) for standard cable lengths.
(2) *y* = 1 (1 m [3.3 ft]), 2 (2 m [6.6 ft]), 3 (3 m [9.8 ft]), 5 (5 m [16.4 ft]), or 10 (10 m [32.8 ft]) for standard cable lengths.
(3) *z* = 4 or 8 for number of ports.

Table 36 - Connector Ratings

Description	Max Ratings		Applicable Standards
	AC	DC	
4-pin Micro (M12)	250V, 4 A	250V, 4 A	IEC 61076-2-101:2003
5-pin Micro (M12)	60V, 4 A	60V, 4 A	IEC 61076-2-101:2003
6-pin Micro (M12)	30V, 2 A	30V, 2 A	IEC 61076-2-101:2003
8-pin Micro (M12)	30V, 2 A	30V, 2 A	IEC 61076-2-101:2003
12-pin M23	63V, 6 A	63V, 6 A	IEC 61984:2001

Accessories

Description	Cat. No.
Replacement actuator	440N-A02005

Approximate Dimensions

Figure 34 - Interlock Switch Dimensions [mm (in.)]

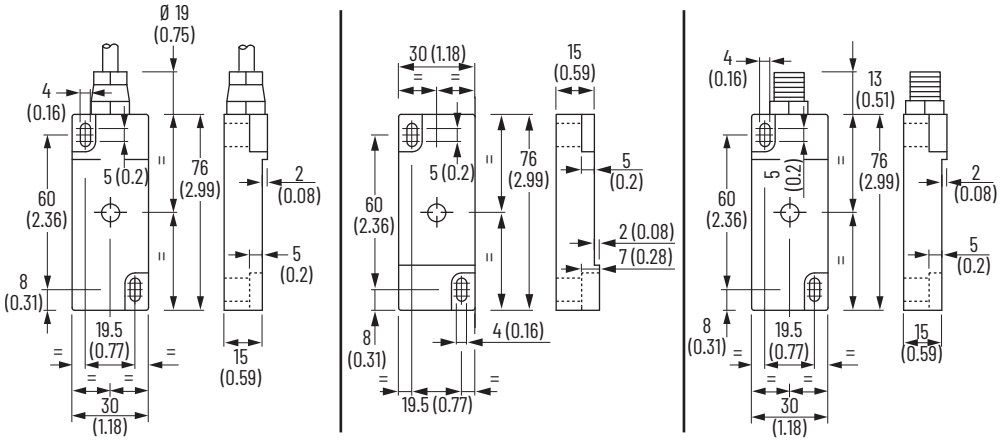

Typical Wiring Diagrams

Description		FRS1 1 N.C.	FRS2 DC Micro 1 N.C. + 1 N.O.	FRS20 DC Micro 2 N.C.	FRS21 AC Micro 2 N.C. + 1 N.O.
4-pin Micro (M12) 	1 and 3	–	Safety A	Safety A	–
	2 and 4		Aux A	Safety B	
6-pin AC Micro (M12) 	1 and 5	–	–	–	Safety A
	2 and 8				Safety B
	3 and 4				Aux A
Cordset 889D-F4AC-*x* or cable versions (1)	Brown	–	Safety A	Safety A	–
	Blue				
	Black	–	–	–	–
	White				
Cordset 889R-F6ECA-*x* (1)	Red/White	–	–	–	Safety A
	Red/Black				
	Red				Safety B
	Red/Blue				
	Green				Aux A
	Red/Yellow				
Cable versions	Safety A	Brown	Blue	Brown	Black
		Blue	White	Blue	White
	Safety B	–	Yellow	Black	Red
			Green	White	Blue
	Aux A	–	–	–	Yellow
					Green

(1) *x* = 2 (2 m [6.6 ft]), 5 (5 m [16.4 ft]), or 10 (10 m [32.8 ft]) for standard cable lengths.

Ferrogard 3, 4, and 5 Non-contact Interlock Switches

The Ferrogard 3, 4, and 5 non-contact interlock switches have the following features:

- Non-contact actuation
- High tolerance to misalignment
- High switching current (up to 2 A)
- Various contact arrangements
- Terminal connections

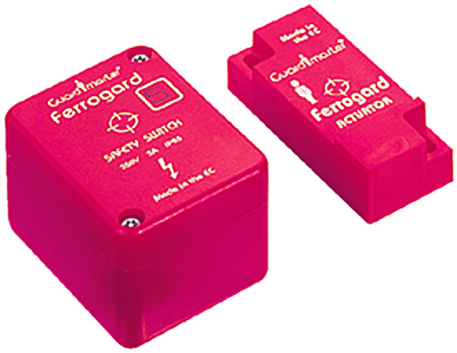

Specifications

Attribute	Ferrogard 3, 4, and 5 Non-contact Interlock Switches
Safety Ratings	
Standards	ISO 14119, IEC 60947-5-3, ISO 13849-1, IEC 62061
Safety classification	Cat. 1 Device per ISO13849-1. Dual-channel interlocks suitable for Cat. 3 or 4 systems
Functional safety data	B10d: > 2 x 10^6 operations Dual channel interlock can be suitable for Performance Level PLe or PLd (according to ISO 13849-1) and for use in SIL 2 or SIL 3 systems (according to IEC 62061) depending on application characteristics
Certifications	CE Marked for all applicable EU directives, UKCA Marked for all applicable regulations rok.auto/certifications
Outputs (Guard Door Closed, Actuator in Place)	
Safety outputs	• FRS3: 1 N.C. • FRS4: 1 N.C. • FRS5: 1 N.C
Auxiliary outputs	• FRS3: 1 N.C. • FRS4: 1 N.O. • FRS5: None
Operating Characteristics	
Operating distance, make [mm (in.)]	Safety/Auxiliary: • FRS 3: 12 (0.47) • FRS 4: 12 (0.47) • FRS 5: 12 (0.47)
Operating distance, break [mm (in.)]	Safety/Auxiliary: • FRS 3: 24 (0.94) • FRS 4: 10 (0.39) • FRS 5: 12 (0.47)
Auxiliary contact switching capability	300V DC, 250V AC 0.5 A including inrush, min
Safety contact external fusing	≤1.6 A quick blow
Environmental	
Enclosure type rating	IP65 (NEMA 13)
Operating temperature [°C (°F)]	-10...+65 (14...149)
Relative humidity	5...95%
Shock	IEC 68-2-27, 30 g, 11 ms
Vibration	IEC 68-2-6, 10...200 Hz
Radio frequency	IEC 61000-4-3, IEC 61000-4-6
Physical Characteristics	
Material	• Housing: Molded ABS plastic • Actuator: Molded ABS plastic
Color	Red

Product Selection

Safety Contact Switching Capability	Connection Type	Housing Material	Safety Contacts (1)	Auxiliary Contacts (1)	Type	Cat. No.
250V AC 2 A max	Terminals	Red molded ABS plastic	1 N.C.	1 N.C.	FRS 3	440N-G02003
				1 N.O.	FRS 4	440N-G02008
				—	FRS 5	440N-G02009

(1) Contacts are described with the guard door closed, that is, the actuator in place.

Accessories

Description	Cat. No.
Replacement actuator	440N-A02005

Approximate Dimensions

Figure 35 - Interlock Switch Dimensions [mm (in.)]

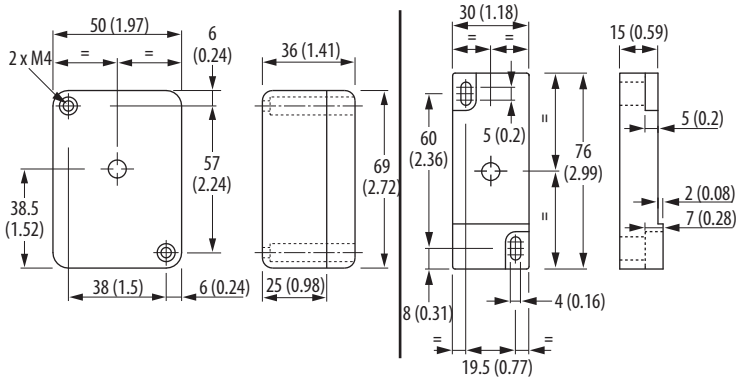

Typical Wiring Diagrams

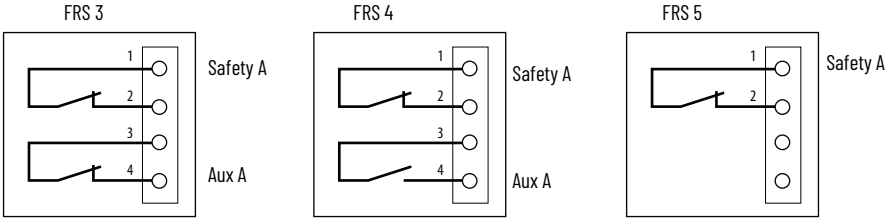

Ferrogard 6, 9, 10, 13, and 14 Non-contact Interlock Switches

The Ferrogard 6, 9, 10, 13, and 14 non-contact interlock switches have the following features:

- Non-contact actuation
- High tolerance to misalignment
- High switching current (up to 3 A)
- Two sensing faces
- IP67 (NEMA 6P) rating
- Slim housings

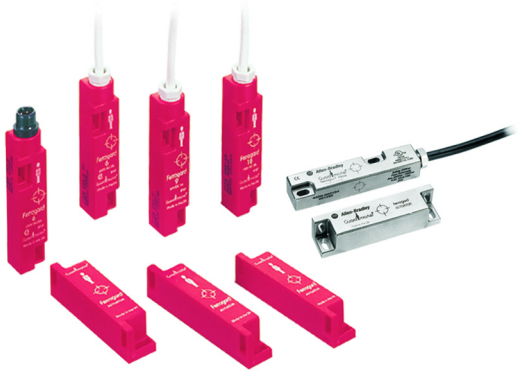

Specifications

Attribute	Ferrogard 6, 9, 10, 13, and 14 Non-contact Interlock Switches	
Safety Ratings		
Standards	ISO 14119, IEC 60947-5-3, ISO 13849-1, IEC 62061	
Safety classification	Cat. 1 Device per ISO13849-1. Dual channel interlocks suitable for Cat. 3 or 4 systems	
Functional safety data	B10d: > 2 x 10^6 operations Dual-channel interlock can be suitable for Performance Level PLe or PLd (according to ISO 13849-1) and for use in SIL 2 or SIL 3 systems (according to IEC 62061) depending on application characteristics See Rockwell Automation Functional Safety Data Sheet, publication SAFETY-SR001	
Certifications	• FRS6, FRS9, FRS10: CE Marked for all applicable EU directives, UKCA Marked for all applicable regulations rok.auto/certifications • FRS13, FRS14: CE Marked for all applicable EU directives, UKCA Marked for all applicable regulations, cULus Listed rok.auto/certifications	
Outputs (Guard Door Closed, Actuator in Place)		
Safety outputs	1 N.C.	1 N.C.
Auxiliary outputs	—	1 N.C.
Operating Characteristics		
Operating distance, make [mm (in.)]	12 (0.47)	
Operating distance, break [mm (in.)]	23 (0.91)	
Environmental		
Enclosure type rating	IP67 (NEMA 6P)	
Operating temperature [°C (°F)]	-10...+65 (14...149)	
Relative humidity	5...95%	
Shock	IEC 68-2-27, 30 g, 11 ms	
Vibration	IEC 68-2-6, 10...55 Hz	
Radio frequency	IEC 61000-4-3, IEC 61000-4-6	
Physical Characteristics		
Material	• Housing: Molded ABS plastic • Actuator: Molded ABS plastic	
Weight	• Sensor: 28 g (0.06 lb) • Actuator: 70 g (0.15 lb)	
Color	Red	

Product Selection

Safety Contact Switching Capability	Safety Contacts (1)	Auxiliary Contacts (1)	Housing Material	Type	Connection	Cat. No.
250V AC, 2 A	1 N.C.	–	Red molded ABS plastic	FRS 6	2 m (6.6 ft) cable	440N-G02023
					4 m (13.1 ft) cable	440N-G02028
					6 m (19.7 ft) cable	440N-G02032
					10 m (32.8 ft) cable	440N-G02013
					4-pin Micro QD	440N-G02095
24V DC, 1 A				FRS 9	2 m (6.6 ft) cable	440N-G02044
					4 m (13.1 ft) cable	440N-G02075
					6 m (19.7 ft) cable	440N-G02082
					10 m (32.8 ft) cable	440N-G02089
					4-pin Micro QD	440N-G02096
110V AC, 3 A				FRS 10	2 m (6.6 ft) cable	440N-G02045
					4 m (13.1 ft) cable	440N-G02088
250V AC, 2 A		1 N.C.	Stainless steel	FRS 13	2 m (6.6 ft) cable	440N-G02154
					4 m (13.1 ft) cable	440N-G02155
					8-pin Micro QD	440N-G02160
24V DC, 1 A				FRS 14	2 m (6.6 ft) cable	440N-G02156
					4 m (13.1 ft) cable	440N-G02157
					8-pin Micro QD	440N-G02161

(1) Contacts are described with the guard door closed, that is, the actuator in place.

Table 37 - Connection Systems

Description	Cat. No.	
	4-pin Micro (M12)	8-pin Micro (M12)
Cordset	889D-F4AC-x (1)	889D-F8AB-x (1)
Patchcord	889D-F4ACDM-y (2)	889D-F8ABDM-y (2)

(1) *x* = 2 (2 m [6.6 ft]), 5 (5 m [16.4 ft]), or 10 (10 m [32.8 ft]) for standard cable lengths.
(2) *y* = 1 (1 m [3.3 ft]), 2 (2 m [6.6 ft]), 3 (3 m [9.8 ft]), 5 (5 m [16.4 ft]), or 10 (10 m [32.8 ft]) for standard cable lengths.

Accessories

Description	Cat. No.
FRS 6, 9, 10 plastic replacement actuator	440N-A02025
FRS 13, 14 stainless-steel replacement actuator	440N-A02165

Approximate Dimensions

Figure 36 - FRS 6, 9, and 10 [mm (in.)]

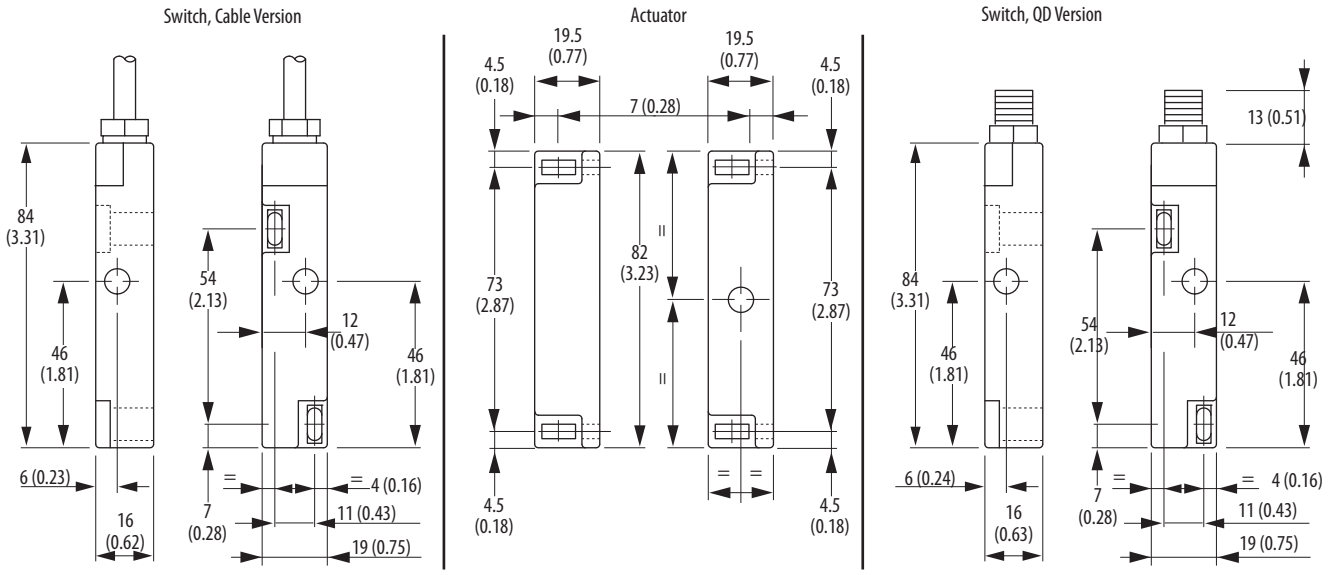

Figure 37 - FRS 13 and 14 [mm (in.)]

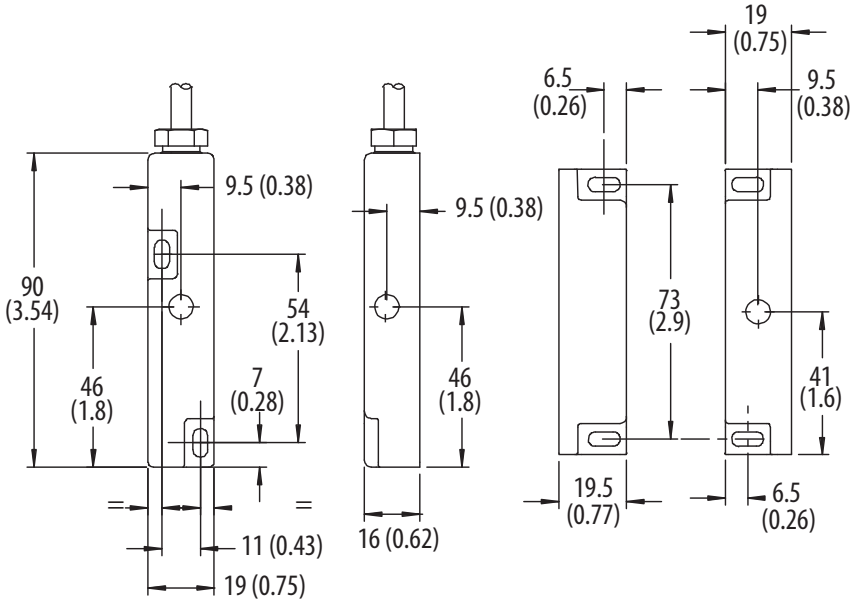

Typical Wiring Diagrams

Description		FRS 6, 9 and 10 1 N.C.	FRS 13 and 14 1 N.C. and 1 N.C.
4-pin Micro (M12) 	1 and 3	Safety A	–
	2 and 4	Aux A	
8-pin Micro (M12) 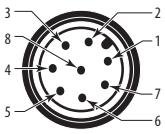	1 and 2	–	Safety A
	3		Ground
	4, 7, and 8		–
	5 and 6		Aux A
Cordset 889D-F4AC-*x* (1)	Brown	Safety A	Safety A
	Blue		
	White	–	Aux A
	Black		
Cordset 889D-F8AB-*x* (1)	White	–	Safety A
	Brown		
	Gray		Aux A
	Pink		
	Green		Ground
Cable version	Safety A	Brown	Brown
		Blue	Blue
	Aux A	–	Black
			Gray

(1) *x* = 2 (2 m [6.6 ft]), 5 (5 m [16.4 ft]), or 10 (10 m [32.8 ft]) for standard cable lengths.

WARNING: All safety contacts fitted with an internal non-resettable fuse and must be fused externally as detailed.

Table 38 - External Fuse Safety Contacts

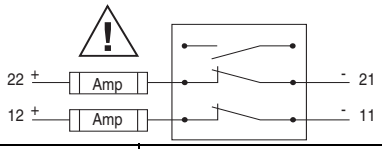

FRS 1, 2, 3, 4, 5, 6, 13, 21 AC	AC 1.6 A (1) ≤ (F) IEC 60127-2
FRS 9, 14, 2 DC, 20 DC, 21 DC	DC 0.4 A (2) ≤ (F) IEC 60127-2
FRS 10	AC 2.5 A (3) ≤ (F) IEC 60127-2

(1) Recommended: Bussman BK/GDA-1.6 A
(2) Recommended: Bussman BK/GDA-400 mA
(3) Recommended: Bussman BK/GDA-2.5 A

Ferrogard GD2 Non-contact Interlock Switches

The Ferrogard GD2 non-contact interlock switches have the following features:

- Non-contact actuation
- High tolerance to misalignment
- High switching current (up to 2 A AC, 1 A DC)
- Wide temperature range [-25...+125 °C (-13...+257 °F)]
- Stainless-steel housing
- Various contact arrangements

Specifications

Attribute	Ferrogard GD2 Non-contact Interlock Switches		
Safety Ratings			
Standards	ISO 14119, IEC 60947-5-3, ISO 13849-1, IEC 62061		
Safety classification	Dual channel interlocks suitable for Cat. 3 or 4 systems		
Functional safety data	B10d: > 2 x 10^6 operations Dual channel interlock can be suitable for Performance Level PLe or PLd (according to ISO 13849-1) and for use in SIL 2 or SIL 3 systems (according to IEC 62061) depending on application characteristics		
Certifications	CE Marked for all applicable EU directives, UKCA Marked for all applicable regulations, cULus Listed rok.auto/certifications		
Outputs (Guard Door Closed, Actuator in Place)			
Safety outputs	1 N.C.	2 N.C.	2 N.C.
Auxiliary outputs	1 N.O.	—	1 N.O.
Operating Characteristics			
Operating distance, make [mm (in.)]	• Safety: 12 (0.47) • Auxiliary: 15 (0.59)		
Operating distance, break [mm (in.)]	• Safety: 23 (0.91) • Auxiliary: 26 (1.02)		
Environmental			
Enclosure type rating	IP68 (NEMA 6P)		
Operating temperature [°C (°F)]	-25...+125 (-13...+257)		
Relative humidity	5...95%		
Shock	IEC 68-2-27, 30 g, 11 ms		
Vibration	IEC 68-2-6, 10...200 Hz		
Radio frequency	IEC 61000-4-3, IEC 61000-4-6		
Physical Characteristics			
Material	• Housing: Stainless steel; BS3146 ANC4B (316L) • Actuator: Stainless steel; BS3146 ANC4B (316L)		
Weight	• Sensor: 156 g (0.34 lb) • Actuator: 168 g (0.37 lb)		

Product Selection

Safety Contact Switching Capability	Safety Contacts(1)	Auxiliary Contacts(1)	Connection	Type	Cat. No.
250V AC, 2 A max	2 N.C.	–	3 m (9.8 ft) cable	FRS 20 GD2	440N-G02113
	1 N.C.	1 N.O.	3 m (9.8 ft) cable	FRS 2 GD2	440N-G02112
	2 N.C.		3 m (9.8 ft) cable	FRS 21 GD2	440N-G02117
24V DC, 1 A max	1 N.C.	1 N.O.	3 m (9.8 ft) cable	FRS 2 GD2	440N-G02118
			10 m (32.8 ft) cable	FRS 2 GD2	440N-G02147
	2 N.C.	–	3 m (9.8 ft) cable	FRS 20 GD2	440N-G02119
	2 N.C.	1 N.O.	3 m (9.8 ft) cable	FRS 21 GD2	440N-G02123
			6 m (19.7 ft) cable	FRS 21 GD2	440N-G02143
			10 m (32.8 ft) cable	FRS 21 GD2	440N-G02137
			8-pin Micro (M12)	FRS 21 GD2	440N-G02149

(1) Contacts are described with the guard door closed, that is, the actuator in place. Switch is shipped with complete actuator.

Table 39 - Connection Systems

Description	Cat. No.
	8-pin Micro (M12)
Cordset	889D-F8AB-x (1)
Patchcord	889D-F8ABDM-y (2)

(1) *x* = 2 (2 m [6.6 ft]), 5 (5 m [16.4 ft]), or 10 (10 m [32.8 ft]) for standard cable lengths.
(2) *y* = 1 (1 m [3.3 ft]), 2 (2 m [6.6 ft]), 3 (3 m [9.8 ft]), 5 (5 m [16.4 ft]), or 10 (10 m [32.8 ft]) for standard cable lengths.

Accessories

Description	Cat. No.
Actuator	440N-A02128

Approximate Dimensions

Figure 38 - Switch [mm (in.)]

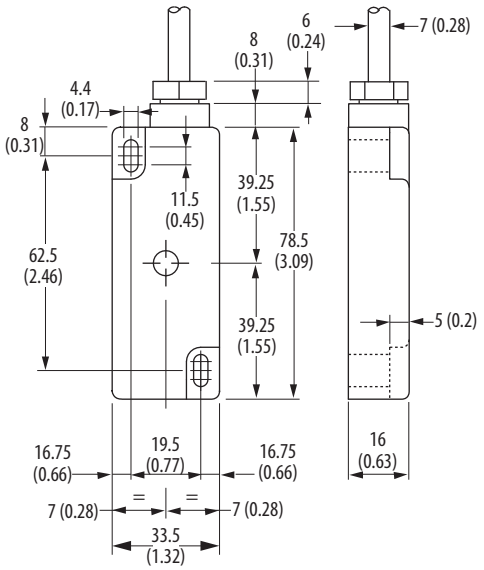

Figure 39 - Actuator [mm (in.)]

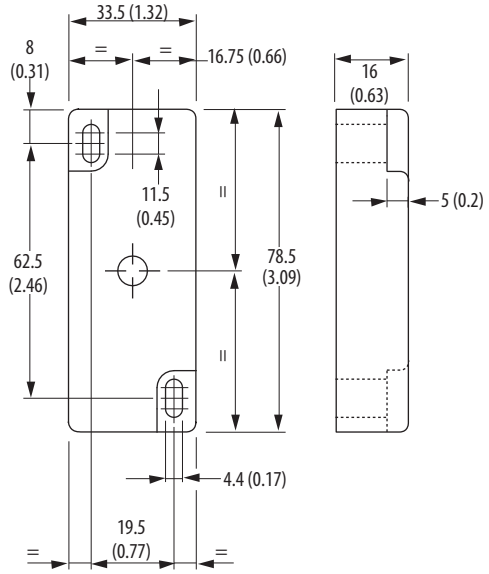

Typical Wiring Diagrams

Description		FRS21 2 N.C. and 1 N.O.	FRS2 1 N.C. and 1 N.O.	FRS20 2 N.C.
Cable versions	Safety A	Black	Blue	Brown
		White	Red	Blue
	Safety B	Red	–	Black
		Blue		White
	Aux A	Yellow	Yellow	
		Green	Green	
	Shield Gnd	–	Green/ Yellow	Green/ Yellow
8-pin Micro (M12) 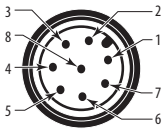	1 and 2	Safety A	–	–
	3	Ground		
	4 and 8	Aux A		
	5 and 6	Safety B		
	7	–		
Cordset 889D-F8AB-x (1)	Brown White	Safety A	–	–
	Gray Pink	Safety B	–	–
	Yellow Red	Safety B	–	–
	Green Blue	–	–	–

(1) *x* = 2 (2 m [6.6 ft]), 5 (5 m [16.4 ft]), or 10 (10 m [32.8 ft]) for standard cable lengths.

WARNING: All safety contacts fitted with an internal non-resettable fuse and must be fused externally as detailed.

Table 40 - External Fuse Safety Contacts

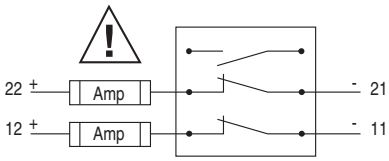

FRS 2 GD2 FRS20 GD2 FRS21 GD2	AC 1.6 A(1) ≤ (F) IEC 60127-2
FRS 2 GD2 FRS 20 GD2 FRS21 GD2	DC 0.4 A(2) ≤ (F) IEC 60127-2

(1) Recommended: Bussman BK/GDA-1.6 A
(2) Recommended: Bussman BK/GDA-400 mA

Ferrogard GS1 and GS2 Non-contact Interlock Switches

The Ferrogard GS1 and GS2 non-contact interlock switches have the following features:

- Non-contact actuation
- High tolerance to misalignment
- High switching current (2 A AC)
- Metal housings (IP68)
- Ex Range version available

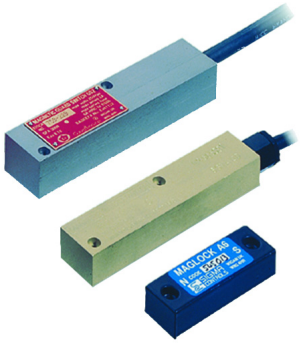

Specifications

Attribute	Ferrogard GS1 and GS2 Non-contact Interlock Switches
Safety Ratings	
Standards	ISO 14119, IEC 60947-5-3, ISO 13849-1, IEC 62061
Safety classification	Cat. 1 Device per ISO13849-1. Dual channel interlocks suitable for Cat. 3 or 4 systems
Functional safety data	B10d: > 2 x 10^6 operations Dual channel interlock can be suitable for Performance Level PLe or PLd (according to ISO 13849-1) and for use in SIL 2 or SIL 3 systems (according to IEC 62061) depending on application characteristics
Certifications	• GS1 and GS2: CE Marked for all applicable EU directives, UKCA Marked for all applicable regulations rok.auto/certifications • GS2 Ex: EExd IIC T6 Baseefa
Outputs (Guard Door Closed, Actuator in Place)	
Safety outputs	1 N.C.
Auxiliary outputs	—
Operating Characteristics	
Operating distance, make [mm (in.)]	• GS1: 12 (0.47) • GS2: 15 (0.59)
Operating distance, break [mm (in.)]	• GS1: 23 (0.91) • GS2: 26 (1.02)
Environmental	
Enclosure type rating	IP68 (NEMA 6P)
Operating temperature [°C (°F)]	• GS1: -25...+125 (-13...+257) • GS2: -40...+60 (-40...+146)
Relative humidity	5...95%
Shock	IEC 68-2-27, 30 g, 11 ms
Vibration	IEC 68-2-6, 10...55 Hz
Radio frequency	IEC 61000-4-3, IEC 61000-4-6
Physical Characteristics	
Material	GS1 • Housing: Stainless steel; BS3146 ANC4B (316L) • Actuator: Epoxy-painted stainless steel GS2 • Housing: Brass • Actuator: Brass
Weight	• GS1: 381 g (0.84 lb) • GS2: 388 g (0.86 lb) • Actuator: 116 g (0.24 lb)

Product Selection

Safety Contact Switching Capability	Connection Type	Housing Material	Safety Contacts(1)	Auxiliary Contacts(1)	Type	Cat. No.
250V AC, 2 A	2 m (6.6 ft) cable	Brass	1 N.C.	None	GS 1	440N-G02048
		Stainless steel				440N-G02049
	3 m (9.8 ft) cable	Brass			GS2-Ex (brass)	440N-H02046
		Stainless steel			GS2-Ex (stainless steel)	440N-H02047

(1) Contacts are described with the guard door closed, that is, the actuator in place. Switch is shipped with complete actuator.

Accessories

Description	Used with	Cat. No.
Actuator, Alnico	Brass switch	440N-A02056
Actuator, epoxy-painted	Stainless-steel switch	440N-A02057

Approximate Dimensions

Figure 40 - Interlock Switch Dimensions [mm (in.)]

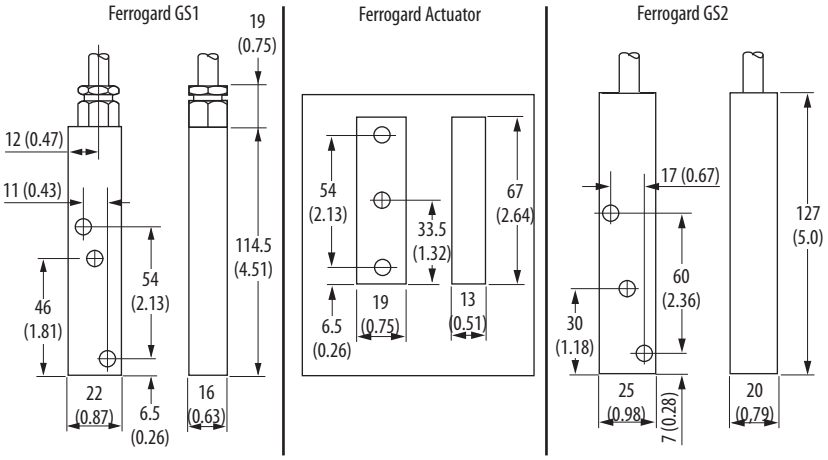

Typical Wiring Diagram

Figure 41 - Interlock Switch Wiring

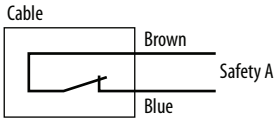

WARNING: All safety contacts fitted with an internal non-resettable fuse and must be fused externally as detailed.

Table 41 - External Fuse Safety Contacts

GS1 GS2	AC 1.6 A(1) ≤ (F) IEC 60127-2

(1) Recommended: Bussman BK/GDA-1.6 A

Sipha Sensors

Sipha™ sensors have the following features:

- Non-contact actuation
- Magnetically coded sensing
- Four housing styles
- Must be operated with its own safety control unit

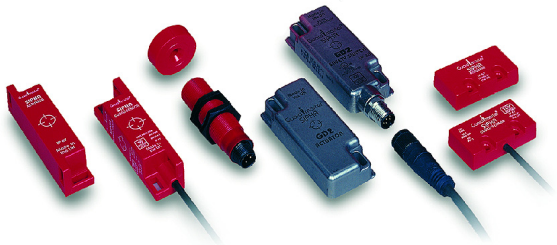

Specifications

Attribute	Sipha Sensors
Safety Ratings	
Standards	ISO 14119, ISO 13849-1, IEC 60947-5-3, IEC 62061, IEC 61508
Safety classification	Rating dependent on control unit and application
Functional safety data	B10d: > 2 x 10^6 operations Dual channel interlock can be suitable for Performance Level PLe or PLd (according to ISO 13849-1) and for use in SIL 2 or SIL 3 systems (according to IEC 62061) depending on application characteristics
Certifications	CE Marked for all applicable EU directives, UKCA Marked for all applicable regulations, cULus Listed, TÜV Certified rok.auto/certifications
Outputs (Guard Door Closed, Actuator in Place)	
Auxiliary output switching	300V DC, 250V AC, 0.5 A including inrush. 15V A/10 W suitable for AC/DC circuits.
Operating Characteristics	
Sensing distance, make [mm (in.)]	• S1 and S3: 5 (0.20) • S2: 9 (0.35) • S4: 10 (0.39)
Sensing distance, break [mm (in.)]	• S1: 11 (0.43) • S2 and S3: 12 (0.47) • S4: 13 (0.51)
Environmental	
Enclosure type rating	IP67 (NEMA 6P)
Operating temperature [°C (°F)]	• S1, S2, and S3: -10...+55 (14...131) • S4 (GD2): -25...+125 (-13...+257)
Shock	30 g, 11 ms half-sine
Vibration	1 mm (0.04 in.), 10...55 Hz
Physical Characteristics	
Cable size	0.54 mm^2 (20 AWG) 4-wire PVC Jacket OD: 4 mm (0.16 in.)
Material	• S1 and S2: Molded ABS • S30 (Actuator): Polyester • S31 (Sensor): Nylon (Trogamid) • S4 (GD2): Stainless steel
Mounting	Any position
Weight	S1 • Sensor: 18 g (0.04 lb) • Actuator: 15 g (0.03 lb) S2 • Sensor: 20 g (0.04 lb) • Actuator: 30 g (0.07 lb) S3 • Sensor: 18 g (0.04 lb) • Actuator: 6 g (0.01 lb) S4 • Sensor: 150 g (0.33 lb) • Actuator: 170 g (0.37 lb)

Product Selection

Housing Style	Housing Material	Safety Contacts[1]	Auxiliary Contacts[1]	Type	Connection	Cat. No.
S1 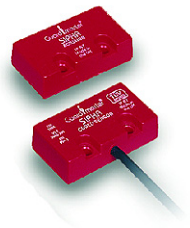	ABS plastic	1 N.C. and 1 N.O.	None	S11	3 m (9.8 ft) cable	440N-S32014
					10 m (32.8 ft) cable	440N-S32016
			1 N.C.	S12	3 m (9.8 ft) cable	440N-S32022
					10 m (32.8 ft) cable	440N-S32032
			1 N.O.	S13	3 m (9.8 ft) cable	440N-S32037
					10 m (32.8 ft) cable	440N-S32036
			None	S21	3 m (9.8 ft) cable	440N-S32015
					10 m (32.8 ft) cable	440N-S32017
S2 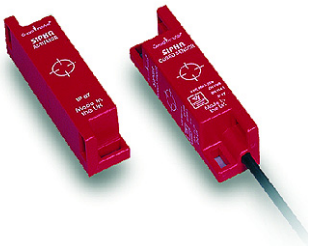			1 N.C.	S22	3 m (9.8 ft) cable	440N-S32023
					10 m (32.8 ft) cable	440N-S32033
			1 N.O.	S23	3 m (9.8 ft) cable	440N-S32038
					10 m (32.8 ft) cable	440N-S32039
S3 	Actuator— Polyester Sensor— Nylon (Trogamid)		None	S31	3 m (9.8 ft) cable	440N-S32101
					4-pin Micro (M12)	440N-S32024
S4 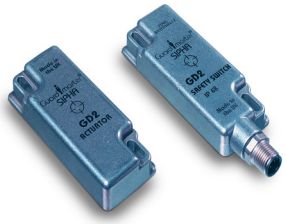	Stainless steel		1 N.C.	S42	8-pin Micro (M12)	440N-S32047
					3 m (9.8 ft) cable	440N-S32053
					10 m (32.8 ft) cable	440N-S32056
			1 N.O.	S43	8-pin Micro (M12)	440N-S32046
					3 m (9.8 ft) cable	440N-S32055
					10 m (32.8 ft) cable	440N-S32054

(1) Contacts are described with the guard door closed, that is, the actuator in place. Switch is shipped complete with actuator.

Table 42 - Connection Systems

Description	4-pin Micro (M12)	8-pin Micro (M12)
Cordset	889D-F4ECA-*x* [1]	889D-F8AB-*x* [1]
Patchcord	889D-F4ECRM-*y* [2]	889D-F8ABDM-*y* [2]

(1) *x* = 2 (2 m [6.6 ft]), 5 (5 m [16.4 ft]), or 10 (10 m [32.8 ft]) for standard cable lengths.
(2) *y* = 1 (1 m [3.3 ft]), 2 (2 m [6.6 ft]), 3 (3 m [9.8 ft]), 5 (5 m [16.4 ft]), or 10 (10 m [32.8 ft]) for standard cable lengths.

Recommended Logic Interface

Housing	Supply Voltage	Safety Contacts	Auxiliary Contacts	Housing Width [mm (in.)]	Type	Cat. No.
	24V AC/DC	1 N.O.	1 N.C. solid state	22.5 (0.89)	Control Unit 1	440N-S32013
	24V AC/DC; 115/230V AC	2 N.O.	1 N.C.	45 (1.77)	Control Unit 2	440N-S32021
	24V AC/DC; 115/230V AC	2 N.O. and 1 N.O. delayed	1 N.C.	90 (3.54)	Sipha 6	440N-S32052

Accessories

Description	Cat. No.
Actuator S10	440N-A32019
Actuator S20	440N-A32020
Actuator S30	440N-A32025
Actuator S40 (GD2)	440N-A32041
Bag of 40 washers for S2 models	440N-A17127

Approximate Dimensions

Figure 42 - Sipha S1 [mm (in.)]

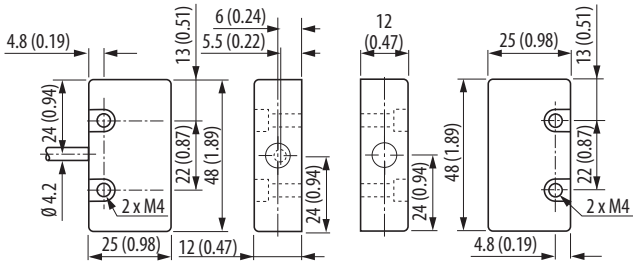

Sipha S11, S12, S13 Sipha S10

Figure 43 - Sipha S2 [mm (in.)]

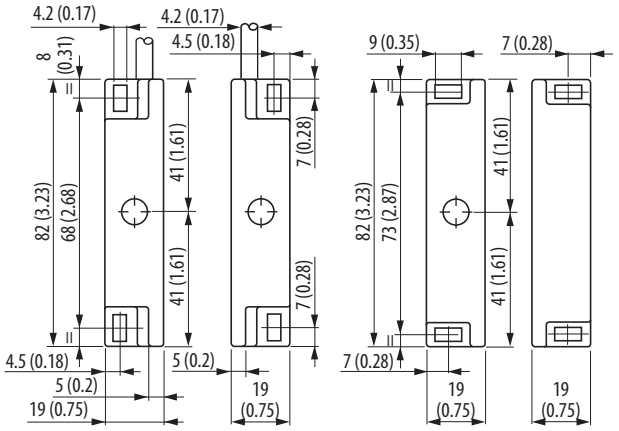

Sipha S21, S22, S23 Sipha S20

Figure 44 - Sipha S3 [mm (in.)]

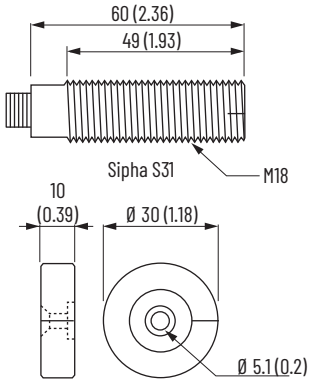

Sipha S30

Figure 45 - Sipha S4 [mm (in.)]

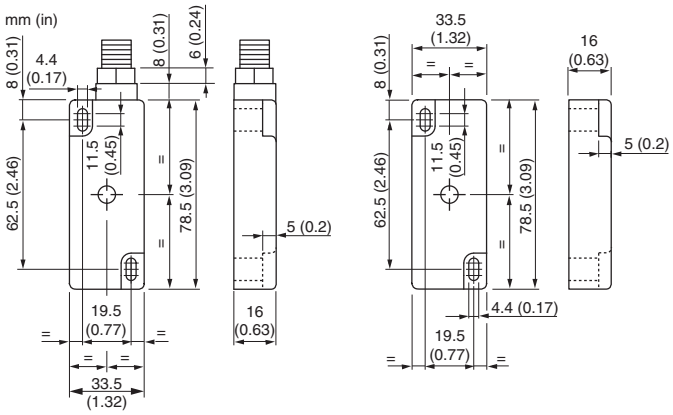

Sipha S42, S43 Sipha S40

Typical Wiring Diagrams

Table 43 - S11, S21, S42, S12, S22, S43, S13, and S23

Description		S11 and S21 1 N.O. and 1 N.C.	S42, S12, and S22 2 N.C. and 1 N.O.	S43, S13, and S23 1 N.C. and 2 N.O.
Cable Versions	Red	Safety A_N.C.	Safety A_N.C.	Safety A_N.C.
	Blue			
	Yellow	Safety B_N.O.	Safety B_N.O.	Safety B_N.O.
	Green			
	Black	–	Aux A_N.C.	Aux A_N.O.
	White			
	Green/Yellow	–	External ground	External ground

Table 44 - S31, S42, and S43 Wiring

Description		S31	S42	S43
4-pin Micro (M12) 	1 and 3	Safety A N.C.	–	–
	2 and 4	Safety B N.O.		
8-pin Micro (M12) 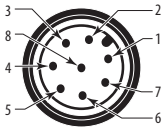	1 and 2	–	Safety A N.C.	Safety A N.C.
	3		Ground	Ground
	4 and 8		Safety B N.O.	Safety B N.O.
	5 and 6		Aux A N.C.	Aux A N.O.
	7		–	–
4-pin Cordset 889D-F4AC-*x* (1)	Brown	Safety A_N.C.	–	–
	Blue			
	White	Safety B_N.O.	–	–
	Black			
8-pin Cordset 889D-F8AB-*x* (1)	White Brown	Safety A	Safety A_N.C.	Safety A_N.C.
	Red Yellow	Safety B	Safety B_N.O.	Safety B_N.O.
	Gray Pink	Aux A	Aux A_N.C.	Aux A_N.O.
	Green Blue	–	Gnd	Gnd

(1) *x* = 2 (2 m [6.6 ft]), 5 (5 m [16.4 ft]) or 10 (10 m [32.8 ft]) for standard cable lengths.

1 N.C 22 mm Compact Metal Safety Limit Switches

440P 1 N.C. 22 mm compact metal safety limit switches have the following features:

- Safety contacts: 1 N.C.
- Auxiliary contacts: 1 N.O.
- Enclosure rating:
  - NEMA 1
  - IP66, IP67
- Rugged die cast housing
- 2 m (6.5 ft) prewired cable
- Compact profile for access limited installation

Specifications

Attribute	1 N.C. 22 mm Compact Metal Safety Limit Switches
Safety Ratings	
Standards	EN IEC 660947-1, IEC 60947-5-1, ISO 14119, EN IEC 60947-1
Safety classification	Cat. 1 Device per ISO 13849-1 dual-channel safety limit switch suitable for Cat. 3 or 4 systems
Certifications	cULus Listed, TÜV Certified, and CE Marked for all applicable EU directives, UKCA Marked for all applicable regulations rok.auto/certifications
Functional safety data	B10d: $2x10^6$ operations
Application	Roller plunger (Figure 47 on page 74): Fulfills IEC 60947-5-1 requirements. Type 1 interlocking devices according to ISO 14119.
Outputs	
Safety contacts	1 N.C. snap action6
Auxiliary contacts	1 N.O. snap action
Thermal current (I_{th})	10 A
Rated insulation voltage (U_i)	300 AC
Short circuit protection	10 A max fast acting fuse IEC 269 type gG or equivalent
Operatings Characteristics	
Actuation speed, max [mm/s (in/s)]	250 (9.84)
Actuation speed, min [mm/min. (in/min.)]	100 (3.94)
Actuation frequency, max [ops/hr]	6000
Mechanical life	1 x 10^7 operations at room temperature
Torque settings [N•m (lb•in)]	• Operator head screws: 0.8 (7.1) • Short and wide roller lever arm hex nut: 1.0 (8.85) • Lever arm screw: 1.8...2.8 (15.93...24.78) • Lever arm collar screw: 3.2 (28.32) • Panel mount nut: 1.5 (13.28)
Environmental	
Enclosure type rating	NEMA 1, IP66/IP67
Operating temperature [C° (F°)]	2...70 (35.6...158)
Pollution degree	3
General	
Housing material	Die cast alloy
Actuator material	Various polymers and metals
Mounting	2 x M4, any position
Vibration	IEC 60068-2-6, 10...55 Hz, 0.35 mm (1.38 in.) amplitude
Shock	IEC 60068-2-7, 30 Gn 3 pulses per axis
Connection	2 m (6.5 ft) cable
Enclosure color	Red body/black head
Intended use	Cam actuated
Interlocking and coding type (1)	Type 1, uncoded

(1) ISO 14119 defines types of interlocking devices and coding.

Product Selection

Description	Cat. No.
Adjustable roller lever arm	440P-AAx
Cross roller plunger	440P-ACx
Dome plunger	440P-ADx
Panel mount roller plunger (threaded collar)	440P-ARx
Short roller lever arm	440P-ASx
Wide roller lever arm	440P-AWx

Approximate Dimensions

Figure 46 - Dome Plunger [mm (in.)]

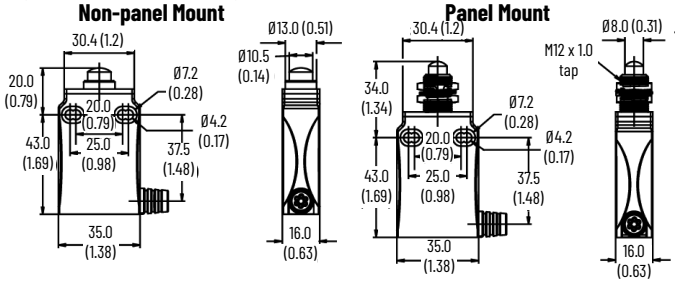

Figure 47 - Roller Plunger [mm (in.)]

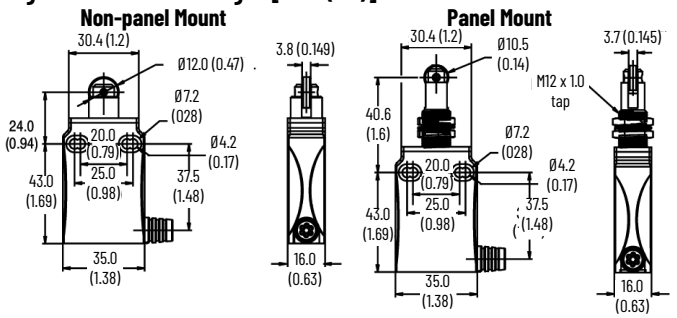

Figure 48 - Cross Roller Plunger [mm (in.)]

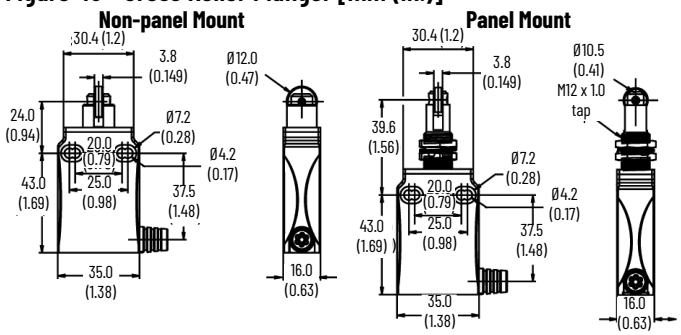

Figure 49 - Replacement Switch [mm (in.)]

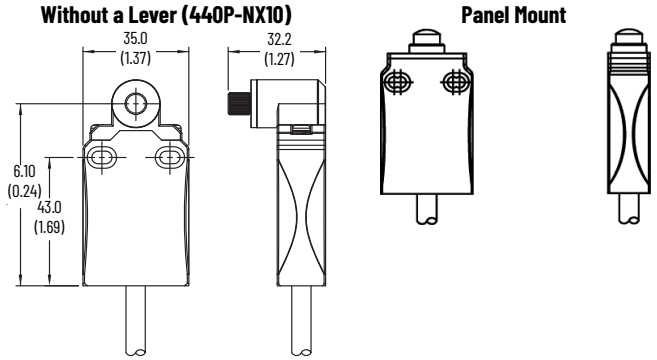

Figure 50 - Countersink Hole [mm (in.)]

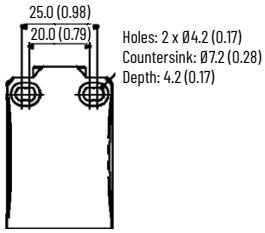

Figure 51 - Short Roller Lever Arm [mm (in.)]

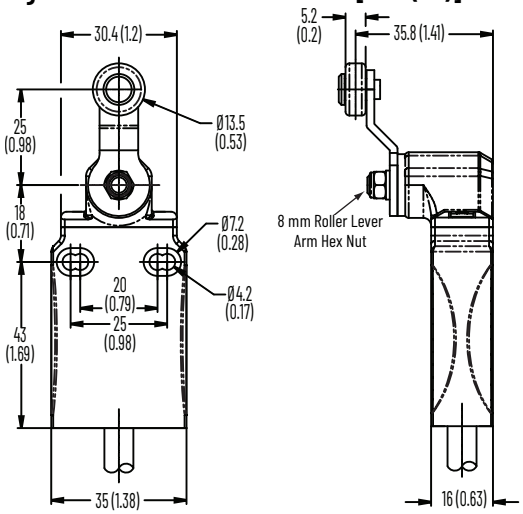

Figure 52 - Wide Roller Lever Arm [mm (in.)]

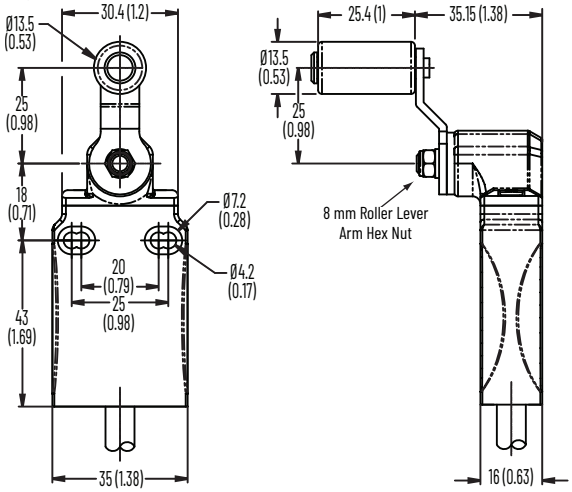

Figure 53 - Adjustable Roller Lever Arm [mm (in.)]

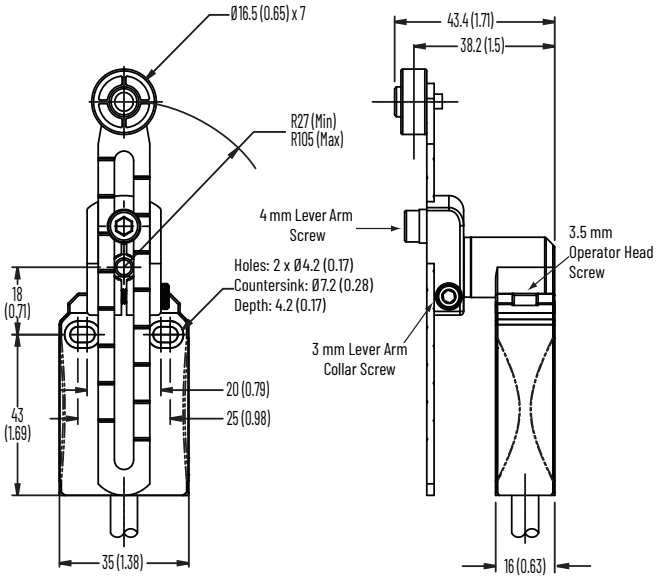

Typical Wiring Diagrams

Table 45 - Max AC Contact Rating Per Pole (50/60 hz) Same Polarity

NEMA Rating Designation	Volts (Max)	Make		Break		Continuous Carrying Current
		[A]	[VA]	[A]	[VA]	[A]
AC15/ B300	120	30	3600	3	360	5
	240	15		1.5		
DC13/ Q300	240	0.27	69	0.27	69	2.5

IMPORTANT Electrical life depends on load, therefore, operations are not applicable and withdrawn.

Figure 54 - Wiring Diagram

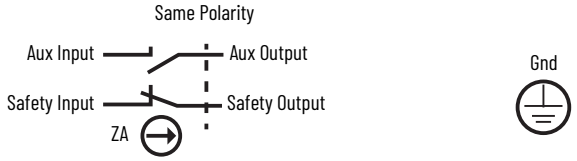

Figure 55 - Contact Opening Characteristics

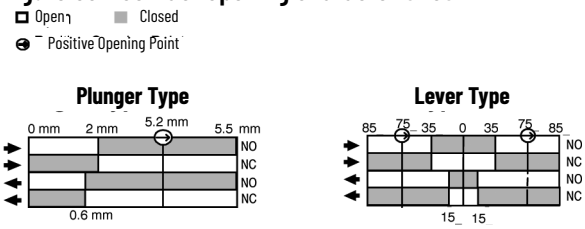

Table 46 - 4-pin Micro (M12) Plug Connector

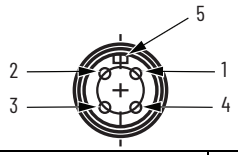

Pin	Type	Contact
1	Safety input	N.C.
2	Aux input	N.O.
3	Safety output	N.C.
4	Aux output	N.O.
5	Keyway	-

Recommended cordset: 889D-F4AB-x.
x = 2 (2 m [6.6 ft]), 5 (5 m [16.4 ft]), or 10 (10 m [32.8 ft]), or contact your local Allen-Bradley distributor or Rockwell Automation sales office.

IMP Safety Limit Switches

440P IMP safety limit switches have the following features:

- Safety contacts: 1 N.C.
- Auxiliary contacts: 1 N.O.
- Enclosure rating: IP30

Specifications

Attribute	IMP Safety Limit Switches
Standards	ISO 14119, IEC 60947-5-1
Safety classification	Type 2 Interlocking Devise per ISO 14119
Functional safety data	See Rockwell Automation Functional Safety Data Sheet, publication SAFETY-SR001
Certifications	CCC Marked, CE Marked for all applicable EU directives, cULus Listed, TÜV Certified, UKCA Marked for all applicable regulations rok.auto/certifications
Safety contacts	1 N.C.
Thermal current	10 A
Contact rating	A600, N300
Auxiliary contacts	1 N.O.
Ingress protection rating	IP30
Ambient temperature [°C (°F)]	-25...+80 (-13...+176)
Mechanical life	10,000,000 operations
Torque settings [N•m (lb•in)]	• Lid screws: 0.2 (1.5) • Terminal screws: 0.7 (6) • M4 mounting screws: 0.6 (5) • M3 mounting screws: 0.5 (4)

Product Selection

Description	Cat. No.
Roller plunger	440P-M18001
Cross roller lever	440P-18002

Approximate Dimensions

Figure 56 - Switch Body [mm (in.)]

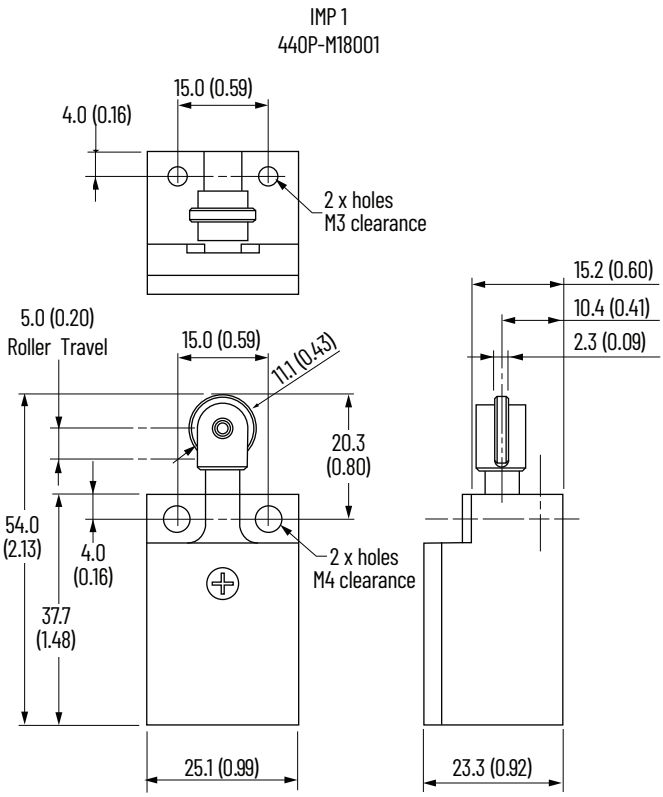

Figure 57 - Switch Body [mm (in.)]

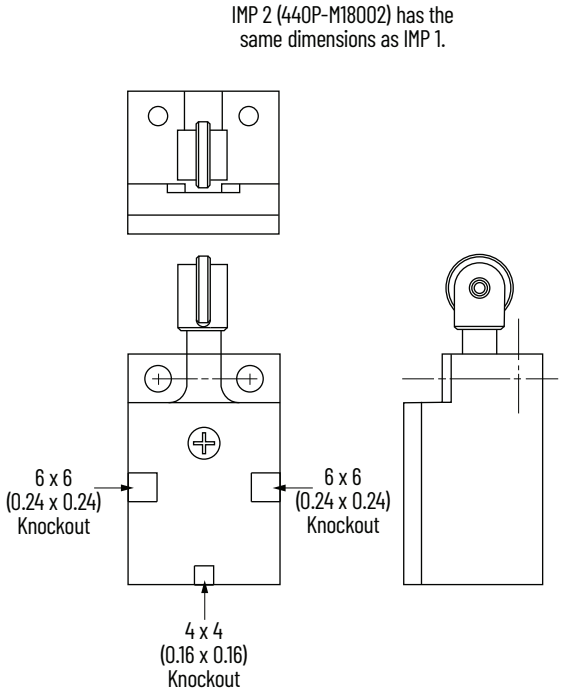

Typical Wiring Diagrams

Figure 58 - Typical Wiring Diagram (1 N.O. and 1 N.C.)

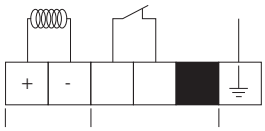

30 mm Compact Metal Body DIN 50041 IEC Style Safety Limit Switches

440P 30 mm compact metal body DIN 50041 IEC style safety limit switches have the following features:

- Safety contacts: 1 N.C.
- Auxiliary contacts: 1 N.O.
- Enclosure rating: IP66
- Rugged die cast housing
- 2 m (6.5 ft) prewired cable
- Compact profile for access limited installation

Specifications

Attribute	30 mm Compact Metal Body DIN 50041 IEC Style Safety Limit Switches
Standards	IEC 60947-5-1, ISO 14119, EN IEC 60947-1
Safety classification	Cat. 1 Device per ISO 13849-1 dual-channel safety limit switch suitable for Cat. 3 or 4 systems
Certifications	cULus Listed, TÜV Certified, and CE Marked for all applicable EU directives, UKCA Marked for all applicable regulations rok.auto/certifications
Functional safety data	B10d: $2x10^6$ operations
Application	Roller plunger (Figure 60 on page 79): Fulfills IEC 60947-5-1 requirements. Type 1 interlocking devices according to ISO 14119.
AC/DC utilization category	AC15, DC13
Fusing rate, max	15 A (fast acting)
Impulse voltage (U_{imp})	2500V
Enclosure protection	IP66
Pollution degree	3
Storage/operating temperature [°C (°F)]	-25...+80 (-13...+176)
Direct opening action	N.C. only (safety circuit)
Conductor size [mm^2 (AWG)]	0.75...2.5 (19...14) solid or stranded copper conductors only
Torque settings [N•m (lb•in)]	• Head: 1.2 (10.6) • Covers: 1.6 (14.2) • M5 mounting screws: 2.5...3 (22.1...26.6) • Wire clamp: 0.9...1.0 (8.0...8.9) • Lever clamp M5 hex screw: 1.8 (15.9) • Lever clamp M3/M4 hex screw: 1.5 (13.3) • Lever clamp adjustable screw: 1.0 (8.9) • Conduit: 1.0 (8.9)
Intended use	Cam actuated
Interlocking and coding type (1)	Type 1, uncoded

(1) ISO 14119 defines types of interlocking devices and coding.

Product Selection

Description	Cat. No.
Adjustable roller lever	440P-MALB
	440P-MALS
Rod lever	440P-MARB
Top push rod	440P-MDPB
	440P-MDPS
Short metal roller lever	440P-MMHB
	440P-MMHS
Top push roller	440P-MRPB
	440P-MRPS
Adjustable rubber roller lever	440P-MRRB
	440P-MRRS
Roller lever	440P-MSLB
	440P-MSLS
Spring rod	440P-MSRB
	440P-MSRS
Telescope arm	440P-MTAB
	440P-MTAS

Approximate Dimensions

Figure 59 - Dimensions [mm (in.)]

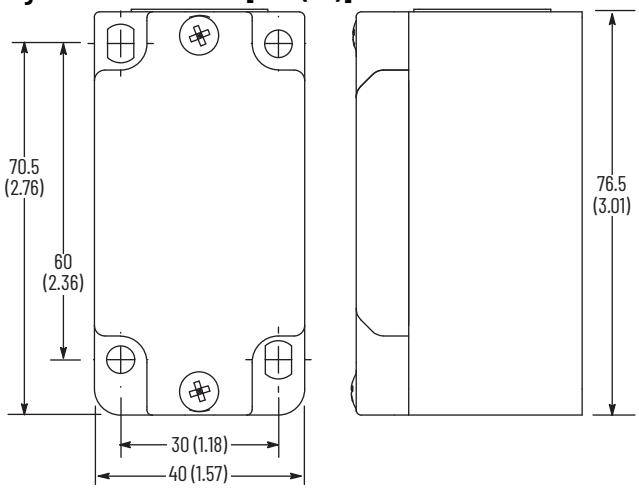

Figure 60 - Dome Plunger [mm (in.)]

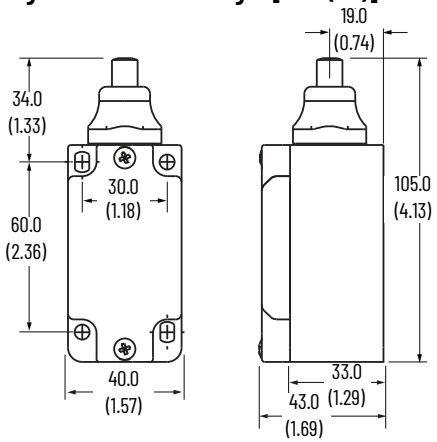

Figure 61 - Roller Plunger [mm (in.)]

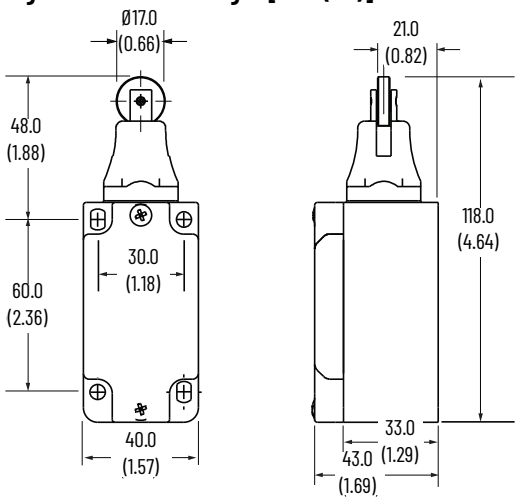

Figure 62 - Short Roller Lever Arm [mm (in.)]

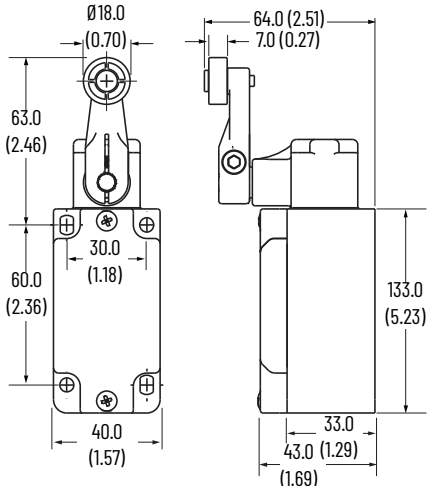

Typical Wiring Diagrams

Table 47 - Connector Ratings

Connection	Max Ratings	Applicable Standards
	AC/DC	
5-pin Mini (M12)	300V, 2.5 A	IEC 61076-2-101:2003
12-pin (M23)	60V, 2.5 A	

Figure 63 - N5 Connector Two-circuit 5-pin Mini-connector

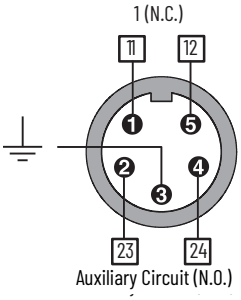

Table 48 - M9 12-pin M23 Connector

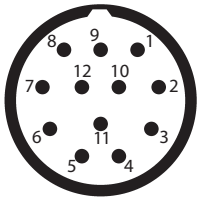

Pin	4 N.C.		3 N.C., 1 N.O.		3 N.C.	
	Terminal	Contact	Terminal	Contact	Terminal	Contact
1 3	11 12	N.C.	11 12	N.C.	11 12	N.C.
4 6	21 22	N.C.	21 22	N.C.	21 22	N.C.
7 8	31 32	N.C.	31 32	N.C.	33 34	N.O.
9 10	41 42	N.C.	43 44	N.O.	43 44	N.O.
12	Ground					

Figure 64 - Contacts

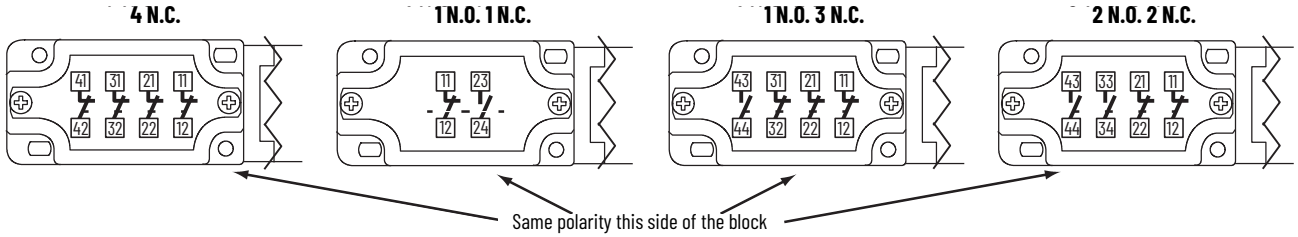

22 mm Compact Metal Safety Limit Switches with 4-pin Micro (M12) Plug Connectors

440P 22 mm compact metal safety limit switches with 4-pin micro (M12) plug connectors have the following features:

- Safety contacts: 1 N.C.
- Auxiliary contacts: 1 N.O.
- Enclosure rating:
  - NEMA 1
  - IP66, IP67
- Rugged die cast housing
- 15 cm (6 in.) pigtail with 4-pin micro (M12) QD plug
- Compact profile for access limited installation

Specifications

Attribute	22 mm Compact Metal Safety Limit Switches with 4-pin Micro (M12) Plug Connectors
Standards	IEC 60947-5-1, EN IEC 60947-1, ISO 14119
Safety classification	Cat. 1 Device per ISO 13849-1 dual-channel safety limit switch suitable for Cat. 3 or 4 systems
Certifications	cULus Listed, TÜV Certified, CE Marked for all applicable EU directives, UKCA Marked for all applicable regulations rok.auto/certifications
Functional safety data	B10d: $2x10^6$ operations
Application	Roller plunger (Figure 67 and Figure 68 on page 82): Fulfills IEC 60947-5-1 requirements. Type 1 interlocking devices according to ISO 14119.
Outputs	
Safety contacts	1 N.C. snap action
Auxiliary contacts	1 N.O. snap action
Thermal current ($/_{Ith}$)	3 A
Rated insulation voltage (U_i)	300V AC
Short circuit protection	3 A max fast acting fuse IEC 269 type gG or equivalent
Operating Characteristics	
Actuation speed, max [mm/s (in/s)]	250 (9.84)
Actuation speed, min [mm/min. (in/min.)]	100 (3.94)
Actuation frequency, max [ops/hr]	6000
Mechanical life	1×10^7 operations at room temperature
Power source, max [AC/DC]	Class 2, 30V 3 A
Torque settings [N•m (lb•in)]	• Operator head screws: 0.8 (7.1) • Short and wide roller lever arm hex nut: 1.0 (8.85) • Lever arm screw: 1.8...2.8 (15.93...24.78) • Lever arm collar screw: 3.2 (28.32) • Panel mount nut: 1.5 (13.28)
Environmental	
Enclosure type rating	NEMA 1, IP66/IP67
Operating temperature [C° (F°)]	2...70 (35.6...158)
Pollution degree	3
General	
Material	• Housing: Die cast alloy • Actuator: Various polymers and metals
Mounting	2 x M4, any position
Vibration	IEC 60068-2-6, 10...55 Hz, 0.35 mm (1.38 in.) amplitude
Shock	IEC 60068-2-7, 30 Gn 3 pulses per axis
Connection	15 cm (6 in.) 4/22 AWG UL AWM 2464 pigtail with 4-pin M12 QD plug
Enclosure color	Red body/black head
Intended use	Cam actuated
Interlocking and coding type (1)	Type 1, uncoded

(1) ISO 14119 defines types of interlocking devices and coding.

Product Selection

Description	Cat. No.
Adjustable roller lever arm	440P-AA1LB02D4
	440P-AA1LS11D4
	440P-AALS11D4
Cross roller plunger	440P-ACRS11D4
Dome plunger	440P-ADPB02D4
	440P-ADPS11D4
Roller plunger	440P-ARPB02D4
	440P-ARPS11D4
Short roller lever arm	440P-ASLB02D4
	440P-ASLS11D4
Wide roller lever arm	440P-AWLS11D4

Approximate Dimensions

Figure 65 - Dome Plunger (Non-panel Mount) [mm (in.)]

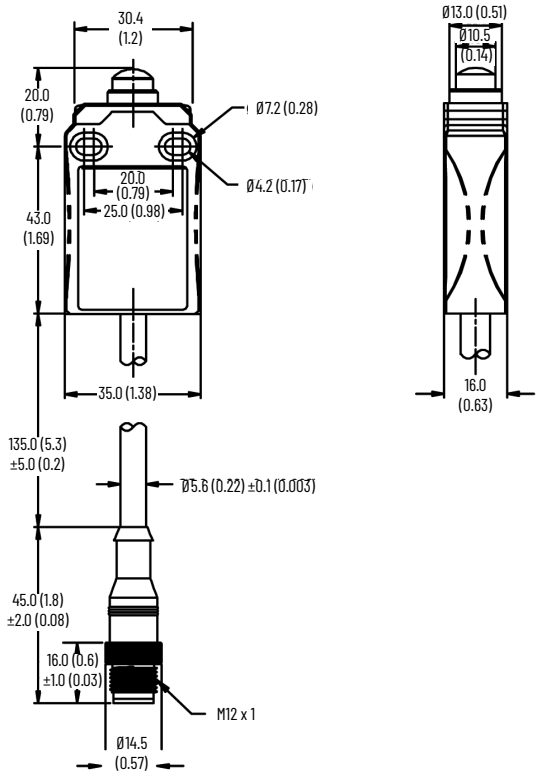

Figure 66 - Dome Plunger (Panel Mount) [mm (in.)]

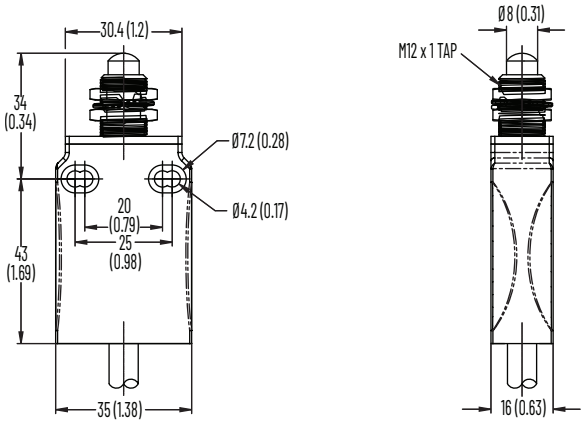

Figure 67 - Roller Plunger (Non-panel Mount) [mm (in.)]

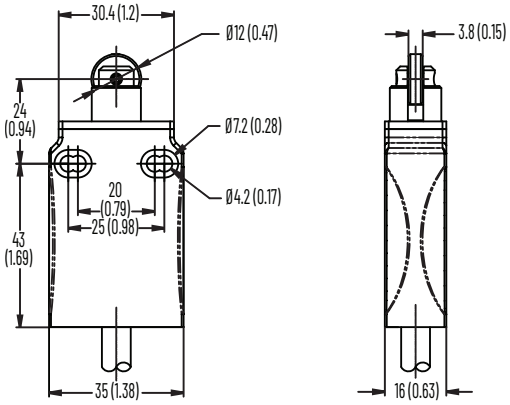

Figure 68 - Roller Plunger (Panel Mount) [mm (in.)]

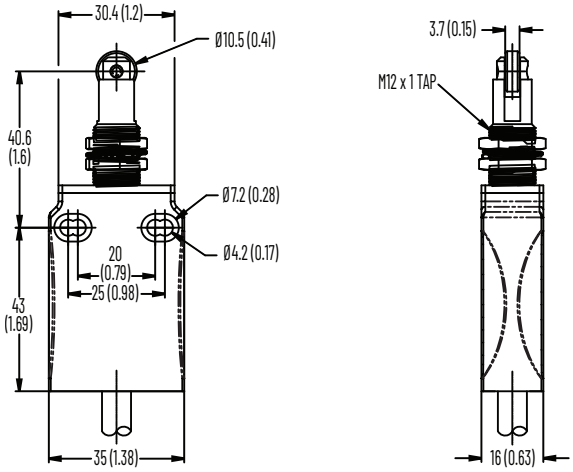

Figure 69 - Cross Roller Plunger (Non-panel Mount) [mm (in.)]

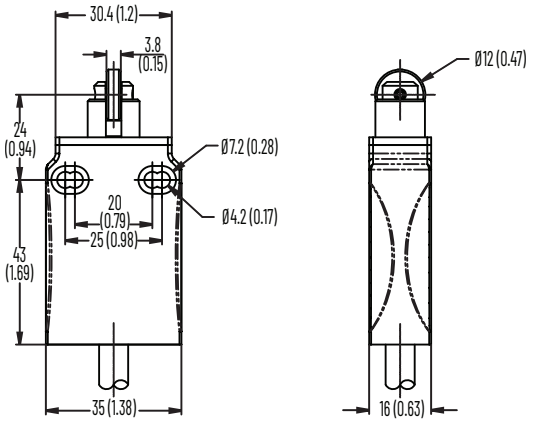

Figure 70 - Cross Roller Plunger (Panel Mount) [mm (in.)]

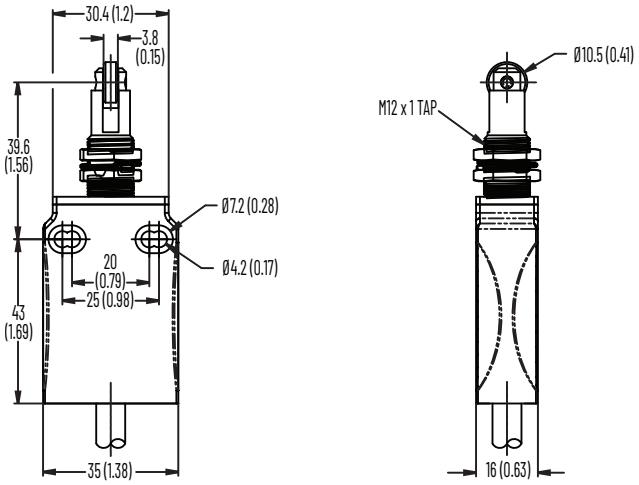

Figure 71 - Countersink Hole [mm (in.)]

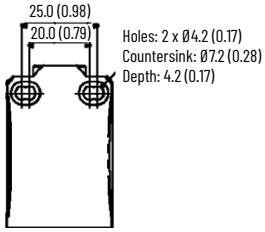

Figure 72 - Short Roller Lever Arm [mm (in.)]

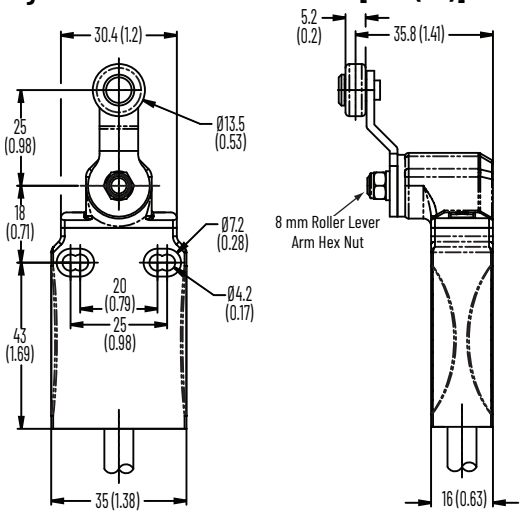

Figure 73 - Wide Roller Lever Arm [mm (in.)]

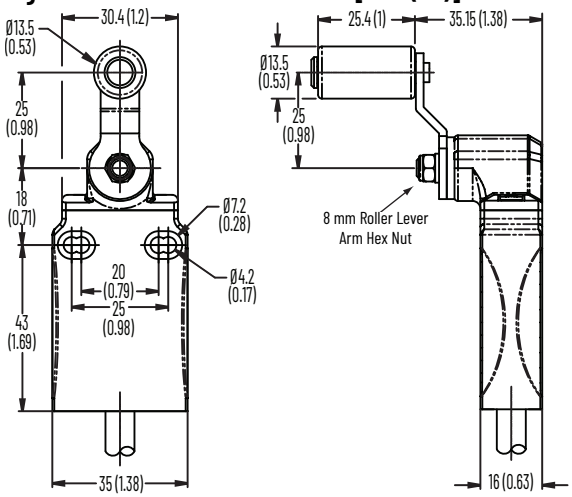

Figure 74 - Adjustable Roller Lever Arm [mm (in.)]

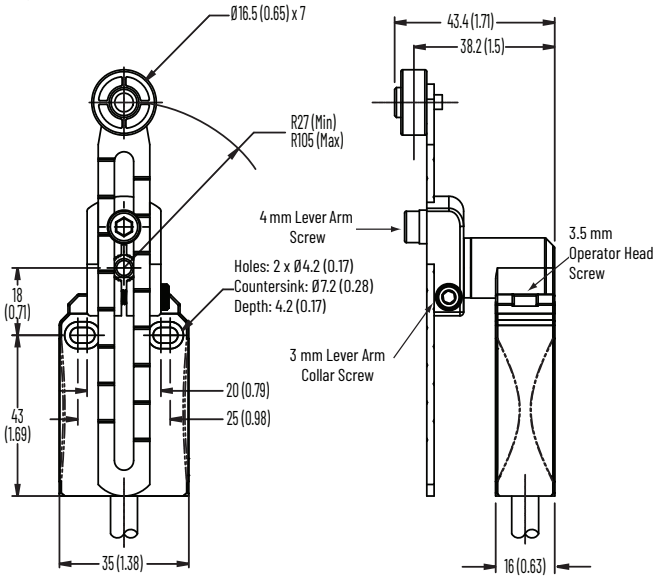

Typical Wiring Diagrams

IMPORTANT Electrical life depends on load, therefore, operations are not applicable and withdrawn.

ATTENTION: No grounding conductor is provided.

Figure 75 - Wiring Diagram

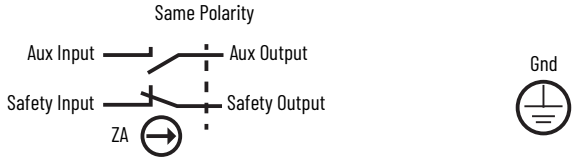

Figure 76 - Contact Opening Characteristics

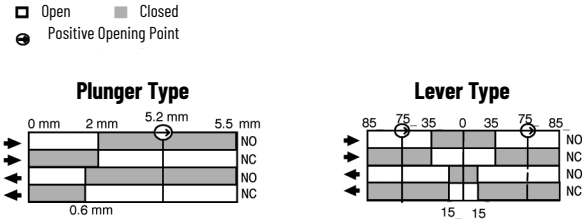

Table 49 - 4-pin Micro (M12) Plug Connector

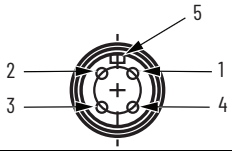

Pin	Type	Contact
1	Safety input	N.C.
2	Aux input	N.O.
3	Safety output	N.C.
4	Aux output	N.O.
5	Keyway	-

22 mm Compact Metal Safety Limit Switches with 5-pin Micro (M12) Plug Connectors

440P 22 mm compact metal safety limit switches with 5-pin micro (M12) plug connectors have the following features:

- Safety contacts: 1 N.C.
- Auxiliary contacts: 1 N.O.
- Enclosure rating:
  - NEMA 1
  - IP66, IP67
- Rugged die cast housing
- 2 m (6.5 ft) prewired cable
- Compact profile for access limited installation

Specifications

Attribute	22 mm Compact Metal Safety Limit Switches with 5-pin Micro (M12) Plug Connectors
Standards	IEC 60947-5-1, ISO 14119, EN IEC 60947-1
Safety classification	Cat. 1 Device per ISO 13849-1 dual-channel safety limit switch suitable for Cat. 3 or 4 systems
Certifications	cULus Listed, TÜV Certified, CE Marked for all applicable EU directives, UKCA Marked for all applicable regulations rok.auto/certifications
Functional safety data	B10d: $2x10^6$ operations
Application	Roller plunger (Figure 79, and Figure 80 on page 86): Fulfills IEC 60947-5-1 requirements. Type 1 interlocking devices according to ISO 14119.
Outputs	
Safety contacts	1 N.C. snap action
Auxiliary contacts	1 N.O. snap action
Thermal current (I_{th})	3 A
Rated insulation voltage (U_i)	300 AC
Short circuit protection	3 A max fast acting fuse IEC 269 type gG or equivalent
Operating Characteristics	
Actuation speed, max [mm/s (in/s)]	250 (9.84)
Actuation speed, min [mm/min. (in/min.)]	100 (3.94)
Actuation frequency, max [ops/hr]	6000
Mechanical life	1×10^7 operations at room temperature
Power source, max [AC/DC]	60V 3 A
Torque settings [N•m (lb•in)]	• Operator head screws: 0.8 (7.1) • Short and wide roller lever arm hex nut: 1.0 (8.85) • Lever arm screw: 1.8...2.8 (15.93...24.78) • Lever arm collar screw: 3.2 (28.32) • Panel mount nut: 1.5 (13.28)
Environmental	
Enclosure type rating	NEMA 1, IP66/IP67
Operating temperature [C° (F°)]	2...70 (35.6...158)
Pollution degree	3
General	
Material	• Housing: Die cast alloy • Actuator: Various polymers and metals
Mounting	2 x M4, any position
Vibration	IEC 60068-2-6, 10...55 Hz, 0.35 mm (1.38 in.) amplitude
Shock	IEC 60068-2-7, 30 Gn 3 pulses per axis
Connection	15 cm (6 in.) 5/22 AWG UL AWM 2464 pigtail with 5-pin M12 QD plug
Enclosure color	Red body/black head
Intended use	Cam actuated
Interlocking and coding type (1)	Type 1, uncoded

(1) ISO 14119 defines types of interlocking devices and coding.

Product Selection

Description	Cat. No.
Adjustable roller lever arm	440P-AA1LB02D5
	440P-AA1LS11D5
	440P-AALS11D5
Cross roller plunger (panel mount)	440P-ACR1S11D5
Cross roller plunger	440P-ACRS11D5
Dome plunger (panel mount)	440P-ADP1S11D5
Dome plunger	440P-ADPB02D5
	440P-ADPS11D5
Roller plunger (panel mount)	440P-ARP1S11D5
Roller plunger	440P-ARPB02D5

Approximate Dimensions

Figure 77 - Dome Plunger (Non-panel Mount) [mm (in.)]

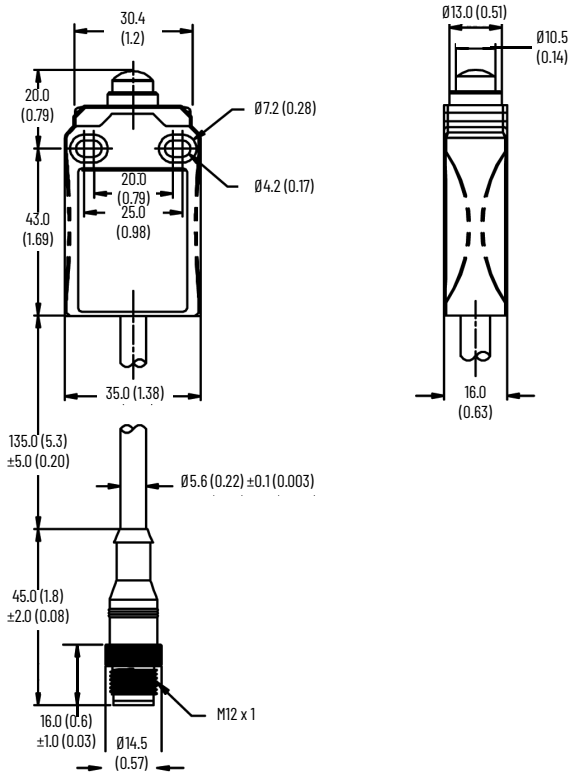

Figure 78 - Dome Plunger (Panel Mount) [mm (in.)]

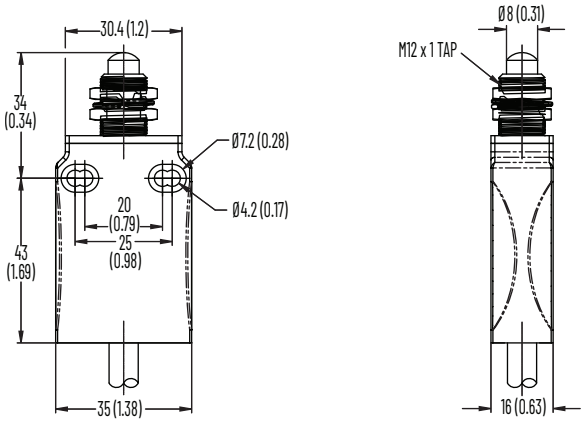

Figure 79 - Roller Plunger (Non-panel Mount) [mm (in.)]

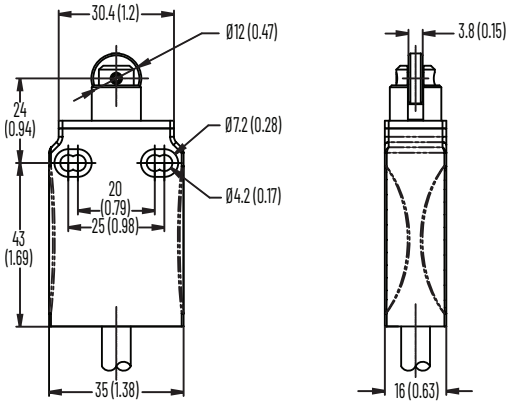

Figure 80 - Roller Plunger (Panel Mount) [mm (in.)]

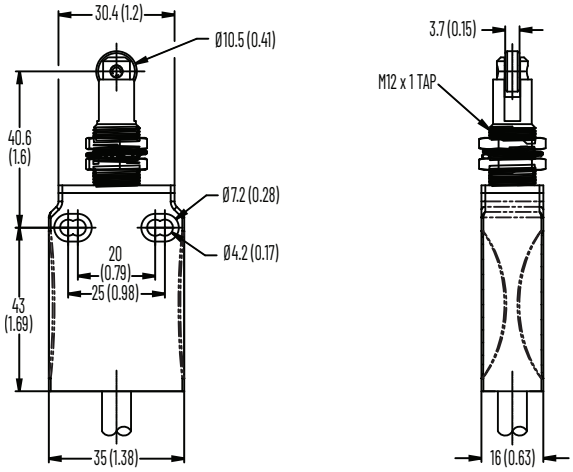

Figure 81 - Cross Roller Plunger (Non-panel Mount) [mm (in.)]

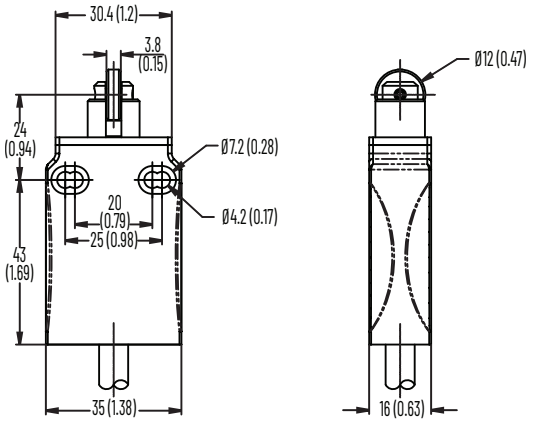

Figure 82 - Cross Roller Plunger (Panel Mount) [mm (in.)]

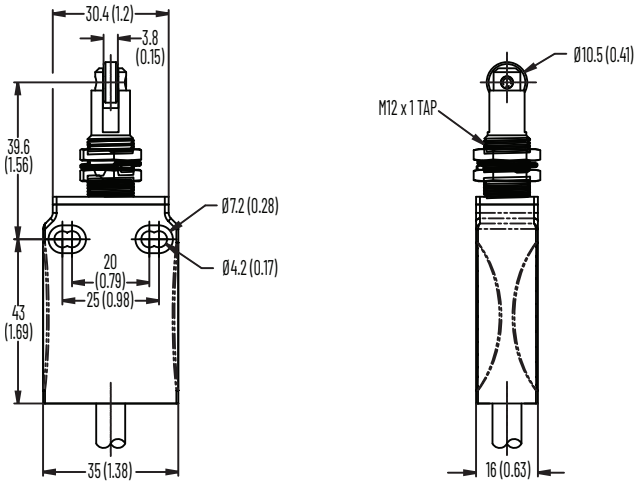

Figure 83 - Countersink Hole [mm (in.)]

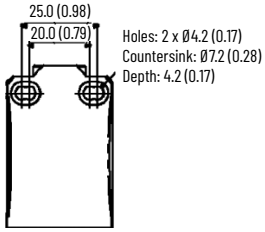

Figure 84 - Short Roller Lever Arm [mm (in.)]

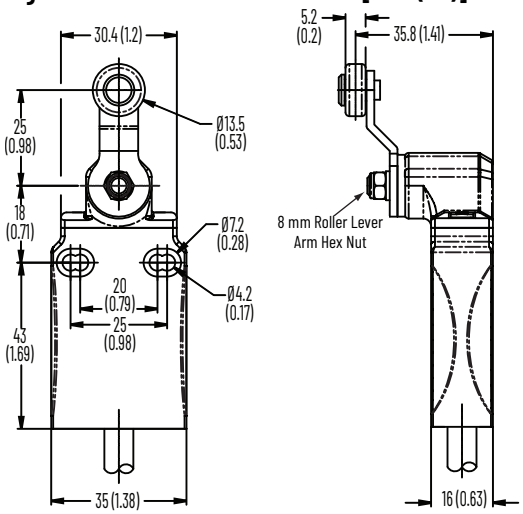

Figure 85 - Wide Roller Lever Arm [mm (in.)]

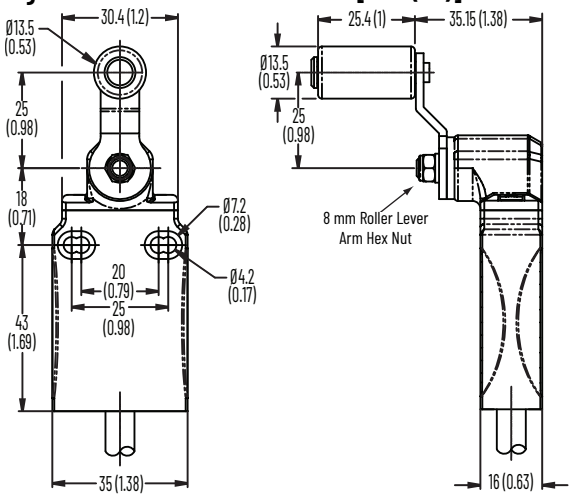

Figure 86 - Adjustable Roller Lever Arm [mm (in.)]

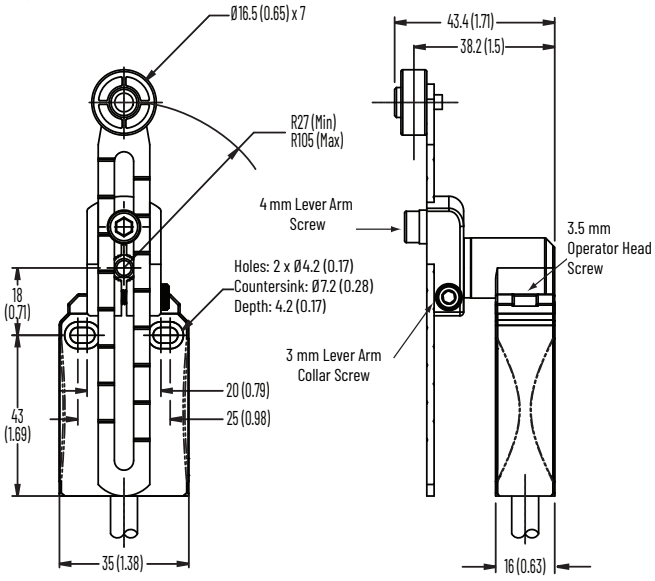

Typical Wiring Diagrams

Figure 87 - Wiring Diagram

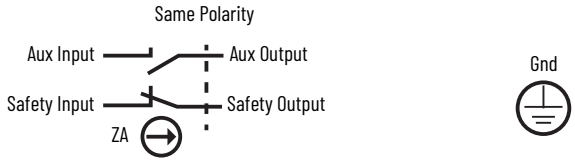

Figure 88 - Contact Opening Characteristics

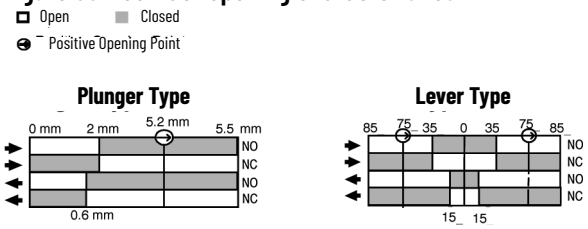

Table 50 - 5-pin Micro (M12) Plug Connector

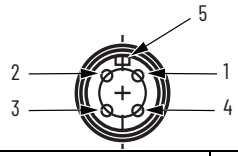

Pin	Type	Contact
1	Aux output	N.O.
2	Aux input	N.C.
3	Common	Ground
4	Safety input	N.C.
5	Safety output	N.C.
6	Keyway	-

2 N.C. 22 mm Compact Metal Safety Limit Switches

440P 2 N.C. 22 mm compact metal safety limit switches have the following features:

- Safety contacts: 2 N.C.
- Enclosure rating:
  - NEMA 1
  - IP66, IP67
- Rugged die cast housing
- 2 m (6.6 ft) prewired cable
- Compact profile for access limited installation

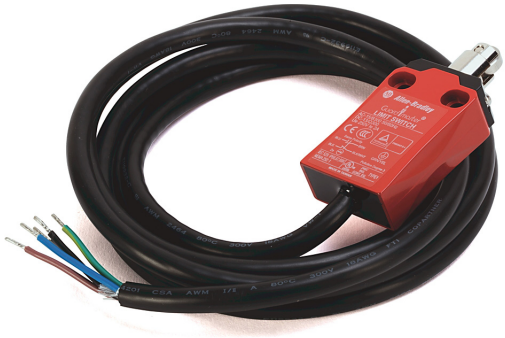

Specifications

Attribute	2 N.C. 22 mm Compact Metal Safety Limit Switches
Standards	IEC 60947-5-1, ISO 14119, EN IEC 60947-1
Safety classification	Cat. 1 Device per ISO 13849-1 dual-channel safety limit switch suitable for Cat. 3 or 4 systems
Certifications	cULus Listed, TÜV Certified, CE Marked for all applicable EU directives, UKCA Marked for all applicable regulations rok.auto/certifications
Functional safety data	B10d: $2x10^6$ operations
Application	Roller plunger (Figure 90 on page 89): Fulfills IEC 60947-5-1 requirements. Type 1 interlocking devices according to ISO 14119.
Outputs	
Safety contacts	2 N.C. snap action
Thermal current (I_{th})	10 A
Rated insulation voltage (U_i)	300 AC
Short circuit protection	10 A max fast acting fuse IEC 269 type gG or equivalent
Operating Characteristics	
Actuation speed, max [mm/s (in/s)]	250 (9.84)
Actuation speed, min [mm/min. (in/min.)]	100 (3.94)
Actuation frequency, max [ops/hr]	6000
Mechanical life	1×10^7 operations at room temperature
Torque settings [N•m (lb•in)]	• Operator head screws: 0.8 (7.1) • Short roller lever arm hex nut: 1.0 (8.85) • Lever arm screw: 1.8...2.8 (15.93...24.78) • Lever arm collar screw: 3.2 (28.32) • Panel mount nut: 1.5 (13.28)
Environmental	
Enclosure type rating	NEMA 1, IP66/IP67
Operating temperature [C° (F°)]	2...70 (35.6...158)
Pollution degree	3
General	
Material	• Housing: Die cast alloy • Actuator: Various polymers and metals
Mounting	2 x M4, any position
Vibration	IEC 60068-2-6, 10...55 Hz, 0.35 mm (1.38 in.) amplitude
Shock	IEC 60068-2-7, 30 Gn 3 pulses per axis
Connection	2 m (6.5 ft) cable
Enclosure color	Red body/black head
Intended use	Cam actuated
Interlocking and coding type (1)	Type 1, uncoded

(1) ISO 14119 defines types of interlocking devices and coding.

Product Selection

Description	Cat. No.
Adjustable roller lever arm	440P-AA1LB02C
	440P-AA1LB02CS
Dome plunger	440P-ADPB02C
	440P-ADPB02CS
Roller plunger	440P-ARPB02C
	440P-ARPB02CS
Short roller lever arm	440P-ASLB02C
	440P-ASLB02CS

Approximate Dimensions

Side cable style shows strain relief for clarity only.

Figure 89 - Dome Plunger [mm (in.)]

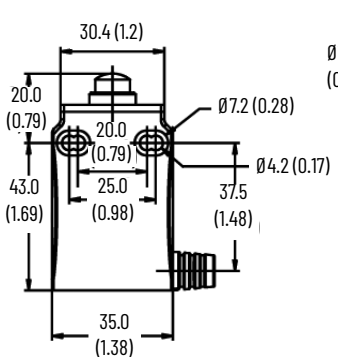

Figure 90 - Roller Plunger [mm (in.)]

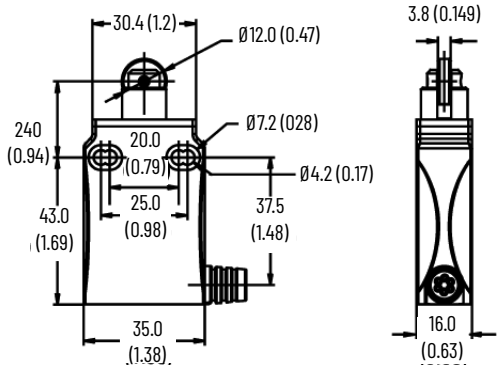

Figure 91 - Countersink Hole [mm (in.)]

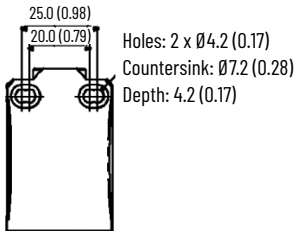

Figure 92 - Short Roller Lever Arm [mm (in.)]

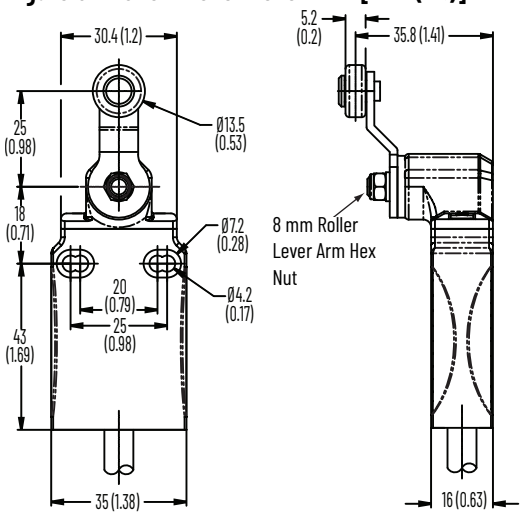

Figure 93 - Adjustable Roller Lever Arm [mm (in.)]

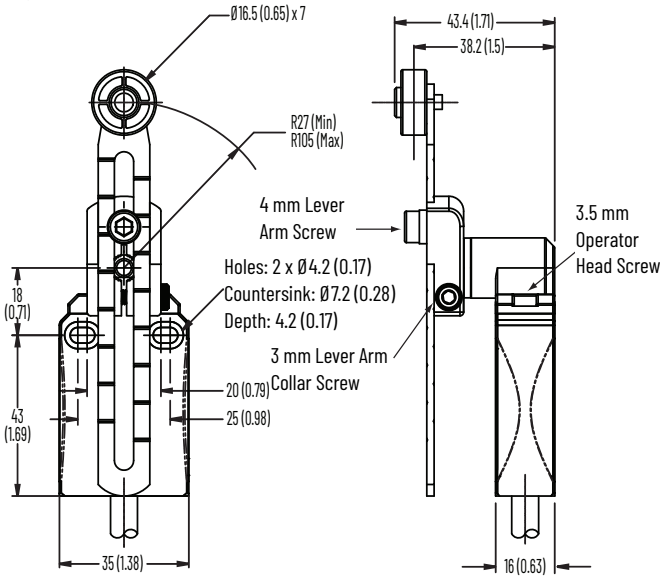

Typical Wiring Diagrams

Table 51 - Max AC Contact Rating Per Pole (50/60 hz) Same Polarity

NEMA Rating Designation	Volts (Max)	Make		Break		Continuous Carrying Current
		[A]	[VA]	[A]	[VA]	[A]
AC15/ B300	120	30	3600	3	360	5
	240	15		1.5		
DC13/ Q300	240	0.27	69	0.27	69	2.5

IMPORTANT Electrical life depends on load, therefore, operations are not applicable and withdrawn.

Figure 94 - Wiring Diagram

Figure 95 - Contact Opening Characteristics

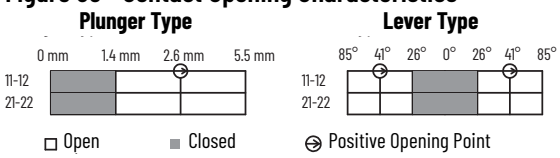

Recommended cable: Cat. No. 889R-F6ECA-*x*

x = 2 (2 m [6.6 ft]), 5 (5 m [16.4 ft]), or 10 (10 m [32.8 ft]) for standard cable lengths. For other cable lengths, contact your local Allen-Bradley distributor or Rockwell Automation sales office.

2 N.C. Compact Metal Safety Limit Switches with 5-pin Micro (M12) Plug Connectors

440P 2 N.C. compact metal safety limit switches with 5-pin micro (M12) plug connectors have the following features:

- Safety contacts: 2 N.C.
- Enclosure rating:
  - NEMA 1
  - IP65, IP67
- Rugged die cast housing
- 15 cm (6 in.) pigtail with 5-pin micro (M12) QD plug
- Compact profile for access limited installation

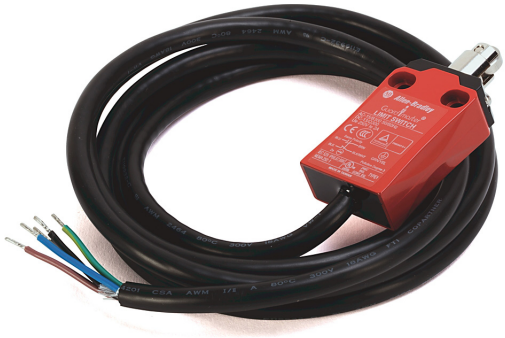

Specifications

Attribute	Value
Standards	IEC 60947-5-1, ISO 14119, EN IEC 60947-1
Safety classification	Cat. 1 Device per ISO 13849-1 dual-channel safety limit switch suitable for Cat. 3 or 4 systems
Certifications	cULus Listed, TÜV Certified, and CE Marked for all applicable EU directives, UKCA Marked for all applicable regulations rok.auto/certifications
Functional safety data	B10d: $2x10^6$ operations
Application	Roller plunger (Figure 97 on page 91): Fulfills IEC 60947-5-1 requirements. Type 1 interlocking devices according to ISO 14119.
Outputs	
Safety contacts	2 N.C. snap action
Thermal current (I_{th})	3 A
Rated insulation voltage (U_i)	250V AC
Short circuit protection	3 A max fast acting fuse IEC 269 type gG or equivalent
Operating Characteristics	
Actuation speed, max [mm/s (in/s)]	250 (9.84)
Actuation speed, min [mm/min. (in/min.)]	100 (3.94)
Actuation frequency, max [ops/hr]	6000
Mechanical life	1×10^7 operations at room temperature
Power source, max [AC/DC]	60V 3 A
Torque settings [N•m (lb•in)]	• Operator head screws: 0.8 (7.1) • Short and wide roller lever arm hex nut: 1.0 (8.85) • Lever arm screw: 1.8...2.8 (15.93...24.78) • Lever arm collar screw: 3.2 (28.32) • Panel mount nut: 1.5 (13.28)
Environmental	
Enclosure type rating	NEMA 1, IP65/IP67
Operating temperature [C° (F°)]	2...70 (35.6...158)
Pollution degree	3
General	
Material	• Housing: Die cast alloy • Actuator: Various polymers and metals
Mounting	2 x M4, any position
Vibration	IEC 60068-2-6, 10...55 Hz, 0.35 mm (1.38 in.) amplitude
Shock	IEC 60068-2-7, 30 Gn 3 pulses per axis
Connection	15 cm (6 in.) 5/22 AWG UL AWM 2464 pigtail with 5-pin M12 QD plug
Enclosure color	Red body/black head
Intended use	Cam actuated
Interlocking and coding type (1)	Type 1, uncoded

(1) ISO 14119 defines types of interlocking devices and coding.

Product Selection

Description	Cat. No.
Adjustable roller lever arm	440P-AA1LB02D5
Dome plunger	440P-ADPB02D5
Roller plunger	440P-ARPB02D5
Short roller lever arm	440P-ASLB02D5

Approximate Dimensions

Figure 96 - Dome Plunger [mm (in.)]

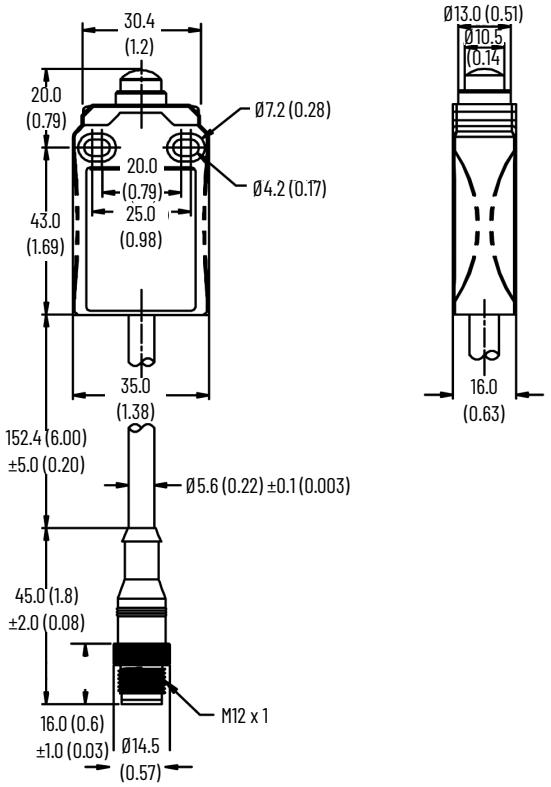

Figure 97 - Roller Plunger [mm (in.)]

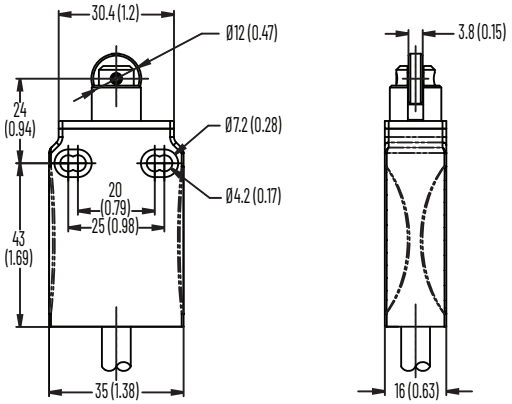

Figure 98 - Countersink Hole [mm (in.)]

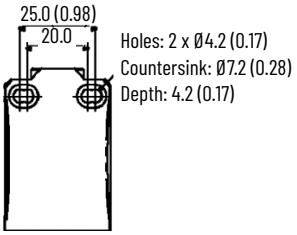

Figure 99 - Short Roller Lever Arm [mm (in.)]

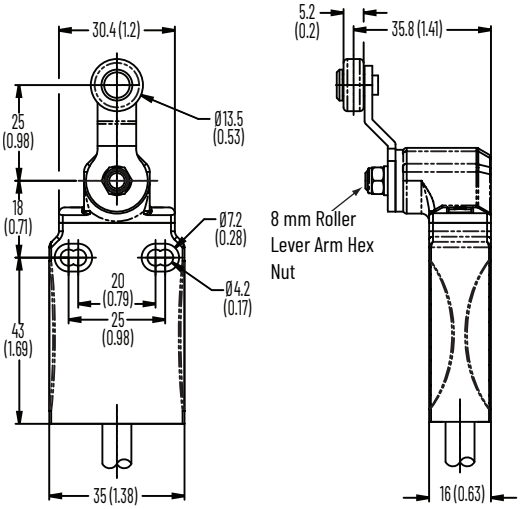

Figure 100 - Adjustable Roller Lever Arm [mm (in.)]

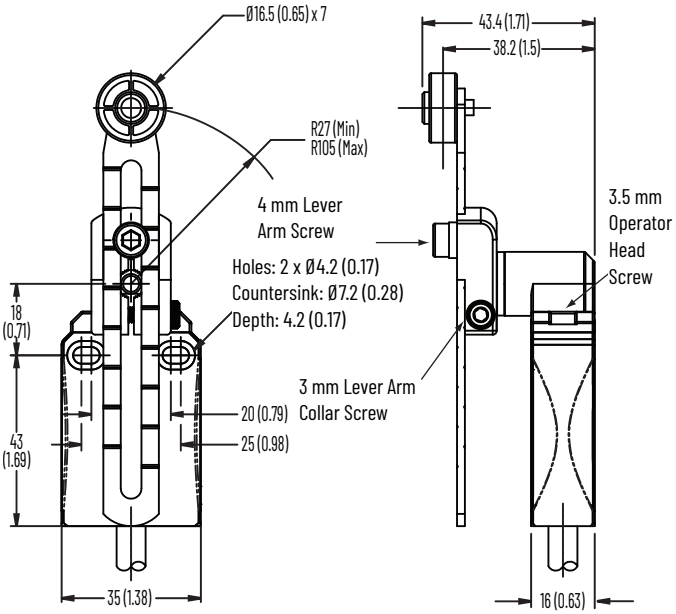

Typical Wiring Diagrams

IMPORTANT Electrical life depends on load, therefore, operations are not applicable and withdrawn.

Figure 101 - Wiring Diagram

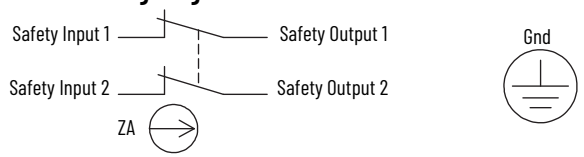

Figure 102 - Contact Opening Characteristics

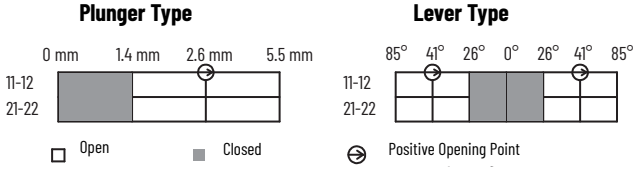

Table 52 - 5-pin Micro (M12) Plug Connector

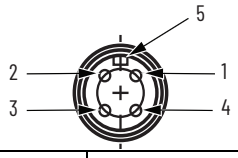

Pin	Color	Type	Contact
1	Brown	Safety output 1	N.C.
2	Blue	Safety input 1	N.C.
3	Green/yellow	Common	Ground
4	Black	Safety input 2	N.C.
5	Black/white	Safety output 2	N.C.
6	-	Keyway	-

Recommended cable: Cat. No. 889D-F5AC-*x*
x = 2 (2 m [6.6 ft]), 5 (5 m [16.4 ft]) (recommended), or 10 (10 m [32.8 ft]) for standard cable lengths. For other cable lengths, contact your local Allen-Bradley distributor or Rockwell Automation sales office.

2 N.C. 22 mm Metal Safety Limit Switches with 4-Pin Micro (M12) Plug Connectors

440P 2 N.C. 22 mm metal safety limit switches with 4-pin micro (M12) plug connectors have the following features:

- Safety contacts: 2 N.C.
- Enclosure rating:
  - NEMA 1
  - IP65, IP67
- Rugged die cast housing
- 15 cm (6 in.) pigtail with 5-pin micro (M12) QD plug
- Compact profile for access limited installation

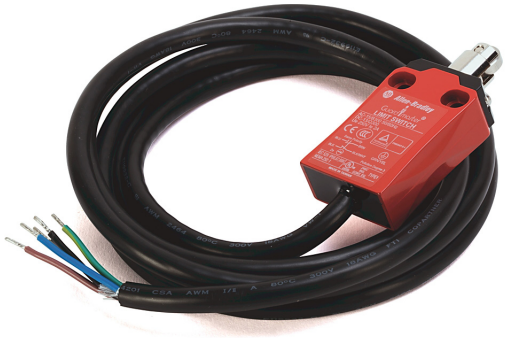

Specifications

Table 53 -

Attribute	2 N.C. 22 mm Metal Safety Limit Switches with 4-Pin Micro (M12) Plug Connectors
Standards	IEC 60947-5-1, ISO 14119, EN IEC 60947-1
Safety classification	Cat. 1 Device per ISO 13849-1 dual-channel safety limit switch suitable for Cat. 3 or 4 systems
Certifications	cULus Listed, TÜV Certified, and CE Marked for all applicable EU directives, UKCA Marked for all applicable regulations rok.auto/certifications
Functional safety data	B10d: $2x10^6$ operations
Application	Roller plunger (Figure 104 on page 94): Fulfills IEC 60947-5-1 requirements. Type 1 interlocking devices according to ISO 14119.
Outputs	
Safety contacts	2 N.C. snap action
Thermal current ($/_{Ith}$)	3 A
Rated insulation voltage (U_i)	250V AC
Short circuit protection	3 A max fast acting fuse IEC 269 type gG or equivalent
Operating Characteristics	
Actuation speed, max [mm/s (in/s)]	250 (9.84)
Actuation speed, min [mm/min. (in/min.)]	100 (3.94)
Actuation frequency, max [ops/hr]	6000
Mechanical life	1×10^7 operations at room temperature
Power source, max [AC/DC]	60V 3 A
Torque settings [N•m (lb•in)]	• Operator head screws: 0.8 (7.1) • Short and wide roller lever arm hex nut: 1.0 (8.85) • Lever arm screw: 1.8...2.8 (15.93...24.78) • Lever arm collar screw: 3.2 (28.32) • Panel mount nut: 1.5 (13.28)
Environmental	
Enclosure type rating	NEMA 1, IP65/IP67
Operating temperature [C° (F°)]	2...70 (35.6...158)
Pollution degree	3
General	
Material	• Housing: Die cast alloy • Actuator: Various polymers and metals
Mounting	2 x M4, any position
Vibration	IEC 60068-2-6, 10...55 Hz, 0.35 mm (1.38 in.) amplitude
Shock	IEC 60068-2-7, 30 Gn 3 pulses per axis

Table 53 -

Attribute	2 N.C. 22 mm Metal Safety Limit Switches with 4-Pin Micro (M12) Plug Connectors
Connection	15 cm (6 in.) 5/22 AWG UL AWM 2464 pigtail with 4-pin M12 QD plug
Enclosure color	Red body/black head
Intended use	Cam actuated
Interlocking and coding type (1)	Type 1, uncoded

(1) ISO 14119 defines types of interlocking devices and coding.

Product Selection

Description	Cat. No.
Adjustable roller lever arm	440P-AA1LB02D4
Dome plunger	440P-ADPB02D4
Roller plunger	440P-ARPB02D4
Short roller lever arm	440P-ASLB02D4

Approximate Dimensions

Figure 103 - Dome Plunger [mm (in.)]

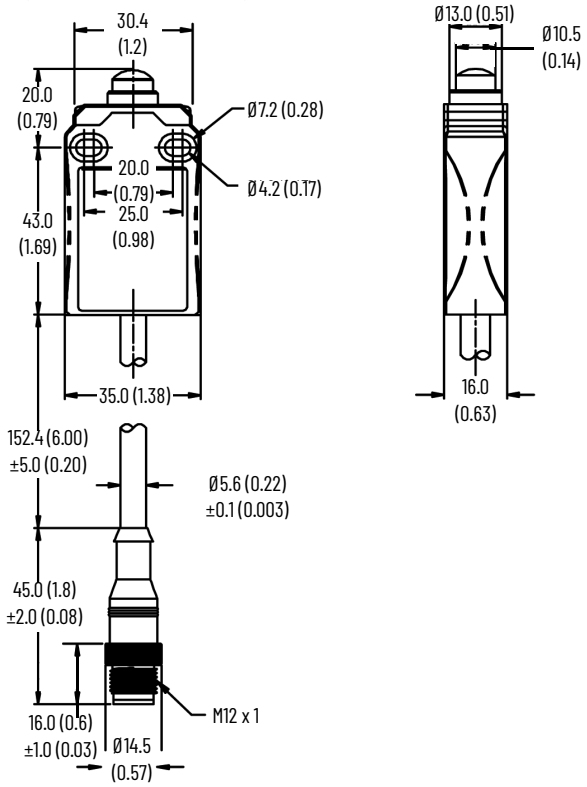

Figure 104 - Roller Plunger [mm (in.)]

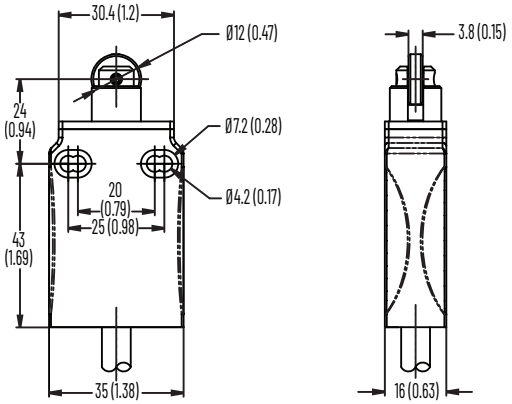

Figure 105 - Countersink Hole [mm (in.)]

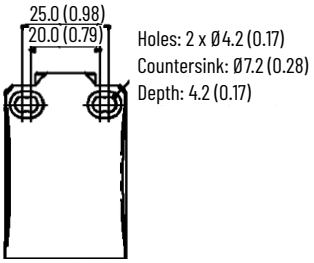

Figure 106 - Short Roller Lever Arm [mm (in.)]

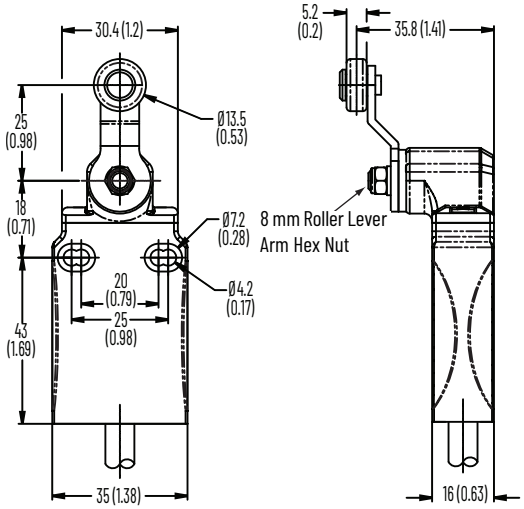

Figure 107 - Adjustable Roller Lever Arm [mm (in.)]

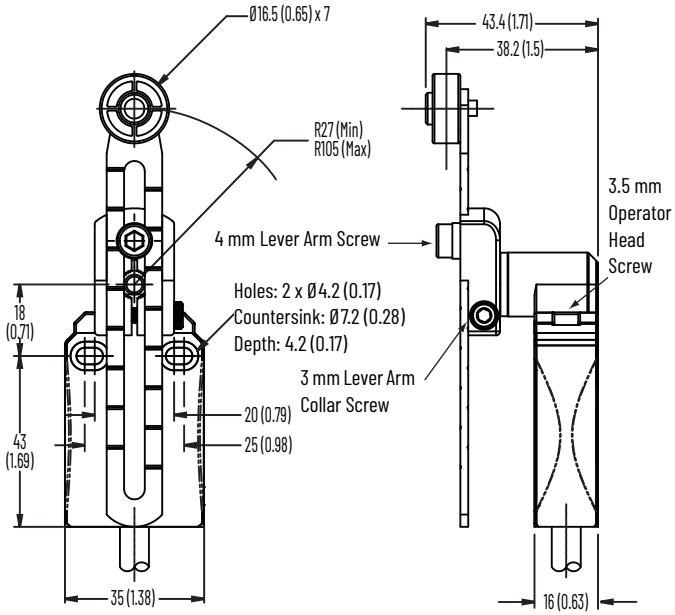

Typical Wiring Diagram

IMPORTANT Electrical life depends on load, therefore, operations are not applicable and withdrawn.

Figure 108 - Wiring Diagram

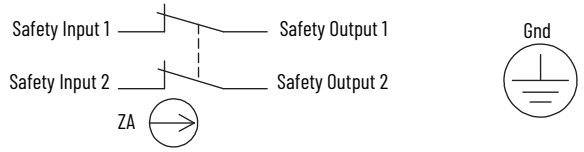

Figure 109 - Contact Opening Characteristics

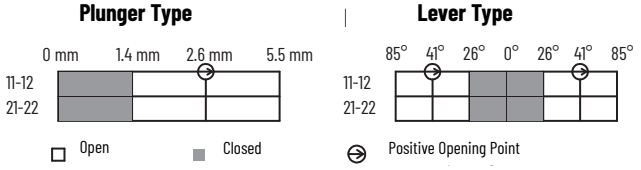

Table 54 - 4-pin Micro (M12) Plug Connector

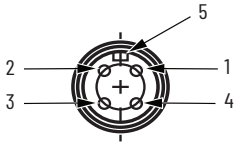

Pin	Color	Type	Contact
1	Black	Safety input 1	N.C.
2	Blue	Safety input 2	N.C.
3	Black/white	Safety output 1	N.C.
4	Brown	Safety output 2	N.C.
5	-	Keyway	-

Recommended cable: Cat. No. 889-F4AB-*x*
x = 2 (2 m [6.6 ft]), 5 (5 m [16.4 ft]), or 10 (10 m [32.8 ft]) for standard cable lengths.
For other cable lengths, contact your local Allen-Bradley distributor or Rockwell Automation sales office.

22 mm Plastic Body IEC Style Safety Limit Switches

440P 22 mm plastic body IEC style safety limit switches have the following features:

- Safety contacts: 2 N.C.
- Enclosure rating: IP66
- Rugged die cast housing
- 15 cm (6 in.) pigtail with 5-pin micro (M12) QD plug
- Compact profile for access limited installation

Specifications

Attribute	22 mm Plastic Body IEC Style Safety Limit Switches				
Standards	IEC 60947-5-1, ISO 14119, EN IEC 60947-1				
Safety classification	Cat. 1 Device per ISO 13849-1 dual-channel safety limit switch suitable for Cat. 3 or 4 systems				
Certifications	cULus Listed, TÜV Certified, CE Marked for all applicable EU directives, UKCA Marked for all applicable regulations rok.auto/certifications				
Functional safety data	B10d: $2x10^6$ operations				
Application	Roller plunger (Figure 110 on page 97): Fulfills IEC 60947-5-1 requirements. Type 1 interlocking devices according to ISO 14119.				
AC/DC utilization category	AC15 (50/60 Hz)				
	Ue (V):	120	240	500	600
	Ie (A):	6	3	1.4	1.2
	DC13				
	Ue (V):	125	250	500	600
	Ie (A):	0.55	0.27	0.13	0.1
Fusing rate, max	8 A (fast acting)				
Impulse voltage (U_{imp})	2500V				
Enclosure protection	IP66				
Pollution degree	3				
Storage/operating temperature [°C (°F)]	-25...+80 (-13...+176)				
Direct opening action	N.C. only (safety circuit)				
Conductor size [mm^2 (AWG)]	0.75...2.5 (19...14 AWG) solid or stranded copper conductors only				
Torque settings [N•m (lb•in)]	• Head: 0.4...0.45 (3.5...4.0) • Covers: 0.4...0.45 (3.5...4.0) • M4 mounting screws: 2.5...3 (22.1...26.6) • Wire clamp: 0.9...1.0 (8.0...8.9) • Lever clamp: 1.4...1.5 (12.4...13.3) • Conduit: 1.0 (8.9)				
Intended use	Cam actuated				
Interlocking and coding type (1)	Type 1, uncoded				

(1) ISO 14119 defines types of interlocking devices and coding.

Product Selection

Description	Cat. No.
Adjustable roller lever arm	440P-CALB
	440P-CALM
	440P-CALS
Top push rod	440P-CDPB
	440P-CDPS
Hinge lever	440P-CHLB
	440P-CHLM
	440P-CHLS
Short roller lever arm	440P-CMHB
	440P-CMHM
	440P-CMHS
Offset hinge	440P-COHB
	440P-COHM
	440P-COHS
Roller plunger	440P-CRPB
	440P-CRPM
	440P-CRPS
Rubber roller	440P-CRRB
	440P-CRRM
	440P-CRRS
Short roller lever	440P-CSLB
	440P-CSLM
	440P-CSLS

Approximate Dimensions

Figure 110 - Roller Plunger [mm (in.)]

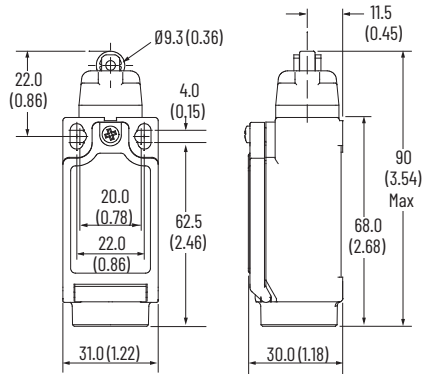

Figure 111 - Dome Plunger [mm (in.)]

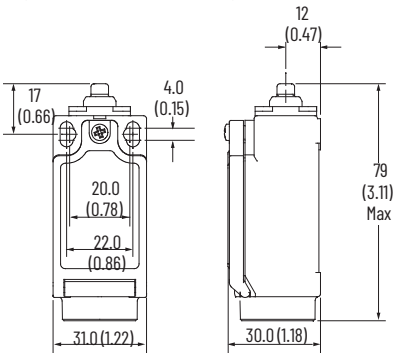

Figure 112 - Hinge Lever [mm (in.)]

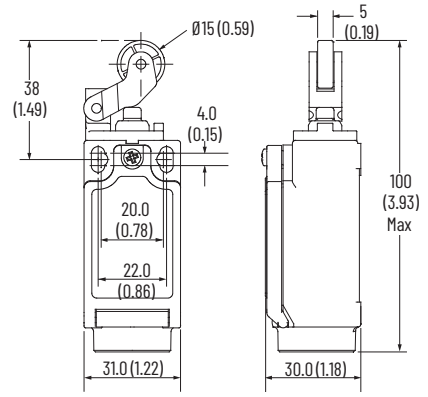

Figure 113 - Short Lever [mm (in.)]

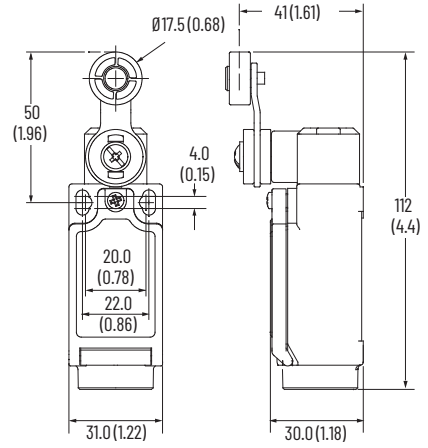

Figure 114 - Offset Hinge [mm (in.)]

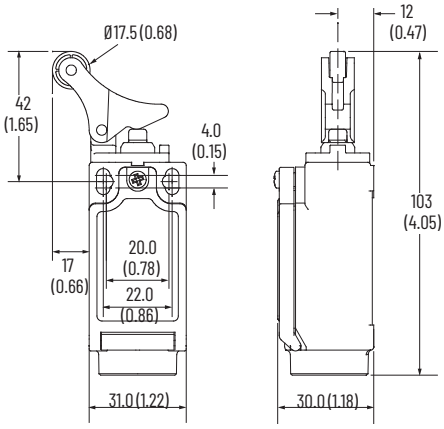

Figure 115 - Adjustable Lever [mm (in.)]

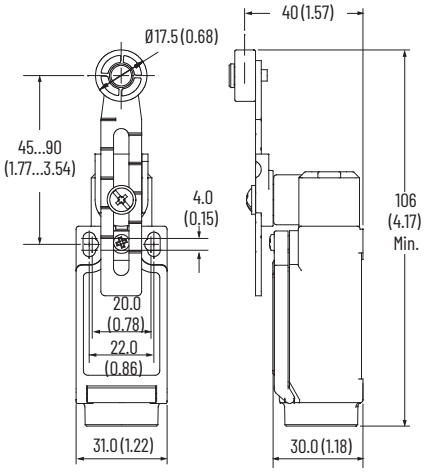

Figure 116 - Rubber Roller [mm (in.)]

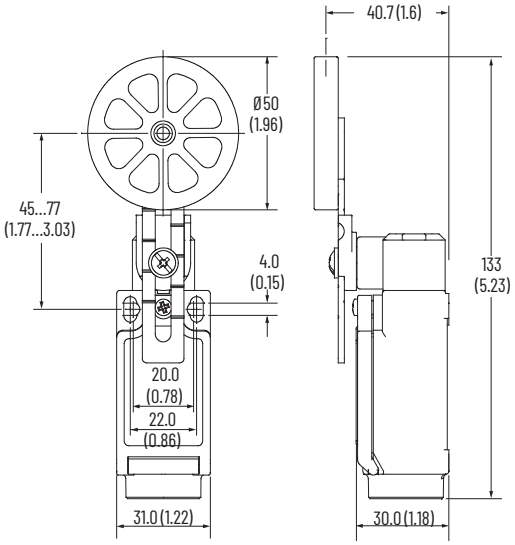

Typical Wiring Diagrams

IMPORTANT Electrical life depends on load, therefore, operations are not applicable and withdrawn.

Table 55 - Connector Ratings

Type	Maximum Ratings		Applicable Standards
	AC	DC	
4-pin micro (M12)	250V, 4 A	250V, 4 A	IEC 61076-2-101:2003
6-pin micro (M12)	30V, 2 A	30V, 2 A	

Table 56 - Two-Circuit Type D4 4-pin Micro Connector

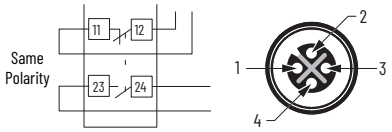

1 N.O. + 1 N.C.

Pin	4 N.C.	
	Terminal	Contact
1	11	N.C.
3	12	
2	23	N.O.
4	24	

Recommended cable: Cat. No. 889R-F4ECA-*x*
x = 2 (2 m [6.6 ft]), 5 (5 m [16.4 ft]), or 10 (10 m [32.8 ft]) for standard cable lengths. For other cable lengths, contact your local Allen-Bradley distributor or Rockwell Automation sales office.

Table 57 - Three-Circuit Type R6 6-pin Micro Connector

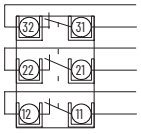

3 N.C.

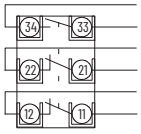

2 N.C. + 1 N.O.

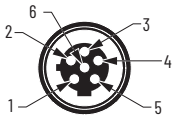

Pin	4 N.C.		4 N.C.	
	Terminal	Contact	Terminal	Contact
1	11	N.C.	11	N.C.
5	12		12	
2	21	N.O.	21	N.O.
6	22		22	
3	33	N.O.	33	N.O.
4	34		34	

Recommended cable: Cat. No. 889R-F6ECA-*x*
x = 2 (2 m [6.6 ft]), 5 (5 m [16.4 ft]), or 10 (10 m [32.8 ft]) for standard cable lengths. For other cable lengths, contact your local Allen-Bradley distributor or Rockwell Automation sales office.

Elf Miniature Tongue Interlock Switches

The Elf™ miniature tongue interlock switches have the following features:

- Ideal for small, lightweight guards
- The smallest interlock switch available
- Contacts, 2 N.C. or 1 N.O. and 1 N.C.
- Eight possible actuator entry points, easy to install
- Environmental protection: IP67
- GD2 style available for difficult applications

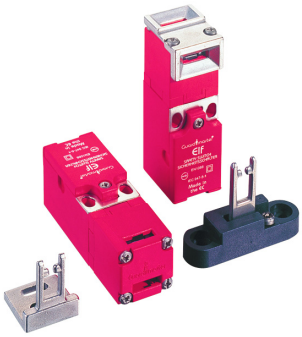

Specifications

Attribute	440K-E			
Safety Ratings				
Standards	ISO 14119, IEC 60947-5-1			
Safety classification	Type 2 interlocking device per ISO 14119			
Functional safety data	See Rockwell Automation Functional Safety Data Sheet, publication SAFETY-SR001			
Certifications	cULus Listed, TÜV Certified, UKCA Marked for all applicable regulations, CE Marked for all applicable EU directives rok.auto/certifications			
Outputs				
Safety contacts (1) Direct opening action	1 N.C.		2 N.C.	
Auxiliary contacts	1 N.O.		None	
Thermal current/$_{Ith}$	5 A (10 A if A600)			
Rated insulation voltage	2500V			
Switching current at voltage, min	3 mA at 18V DC			
Utilization Category				
A600/AC-15 (Ue)	600V	500V	240V	120V
A600/AC-15 (Ie)	1.2 A	1.4 A	3.0 A	6.0 A
DC-13 (Ue)	24V			
DC-13 (Ie)	2 A			
Operating Characteristics				
Break contact force	6 N (1.35 lbf), min			
Actuation speed, max [mm/s (in/s)]	160 (6.29)			
Actuation frequency, max	2 cycles/s			
Operating radius, min [mm (in.]	150 (5.9) [60 (2.36) with GD2 kit]			
Mechanical life	1,000,000 operations			
Environmental				
Enclosure type rating	IP67			
Operating temperature [°C (°F)]	-20...+80 (-4...+176)			
Physical Characteristics				
Material	• Housing: UL approved glass-filled PBT • Actuator: Stainless steel			
Weight [g (oz)]	60 (2.11)			
Color	Red			

(1) The safety contacts are described as normally closed (N.C.) for example, with the guard closed, the actuator in place (where relevant) and the machine able to be started.

Product Selection

Contact			Actuator Type	Cat. No.			
				M16 Conduit		Connector[1]	
Safety	Auxiliary	Action		M16	1/2 inch NPT Adapter	Connect to Distribution Box 4-pin Micro (M12)	Connect to ArmorBlock Guard I/O 5-pin Micro (M12)[2]
1 N.C.	1 N.O.	BBM	Flat	440K-E33036	440K-E33029	440K-E33074	–
			90°	440K-E33040	440K-E33030	440K-E33025	–
			GD2 metal alignment guide w/semi-flexible actuator	440K-E33034	440K-E33031	440K-E33075	–
			–	440K-E33014	440K-E33053	–	–
2 N.C.	–	–	Flat	440K-E33080	440K-E33037	440K-E33077	440K-E2NNFPS
			90°	440K-E33041	440K-E33045	440K-E33024	–
			GD2 metal alignment guide w/semi-flexible actuator	–	440K-E33046	440K-E33078	440K-E2NNAPS
			–	440K-E33047	–	440K-E33079	–

(1) For connector ratings, see Table 59.
(2) With a 5-pin Micro (M12) connector, not all contacts are connected. See Typical Wiring Diagrams on page 102 for wiring details.

Table 58 - Connection Systems

Description	Cat. No.		
	Connection to Distribution Box 4-pin Micro (M12)		Connection to ArmorBlock Guard I/O 5-pin Micro (M12)
	1 N.C. and 1 N.O.	2 N.C.	2 N.C.
Cordset	889D-F4AC-*x* [1]	889D-F4AC-*x* [1]	–
Patchcord	889D-F4ACDM-*y* [2]	889D-F4ACDM-*y* [2]	889D-F5ACDM-*x* [1]
Distribution box	898D-4*z*KT-DM4 [3]	898D-4*z*LT-DM4 [3]	–
Shorting plug	898D-41KU-DM	898D-41LU-DM	–
T-port	898D-43KY-D4	898D-43LY-D4	–

(1) *x* = 2 (2 m [6.6 ft]), 5 (5 m [16.4 ft]), or 10 (10 m [32.8 ft]) for standard cable lengths.
(2) *y* = 1 (1 m [3.3 ft]), 2 (2 m [6.6 ft]), 3 (3 m [9.8 ft]), 5 (5 m [16.4 ft]), or 10 (10 m [32.8 ft]) for standard cable lengths.
(3) *z* = 4 or 8 for number of ports.

Table 59 - Connector Ratings

Description	Max Ratings		Applicable Standards
	AC	DC	
4-pin Micro (M12)	250V, 4 A	250V, 4 A	IEC 61076-2-101
5-pin Micro (M12)	60V, 4 A	60V, 4 A	IEC 61076-2-101
6-pin Micro (M12)	30V, 2 A	30V, 2 A	IEC 61076-2-101
8-pin Micro (M12)	30V, 2 A	30V, 2 A	IEC 61076-2-101
12-pin M23	63V, 6 A	63V, 6 A	IEC 61984

Accessories

Description		Cat. No.
	Flat actuator, not to be used with metal alignment guide	440K-A21014
	90° actuator, not to be used with metal alignment guide	440K-A21006
	Metal alignment guide with semi-flexible actuator	440K-A21030

Description		Cat. No.
	Metal alignment guide	440K-A21069
	Replacement cover	440A-A33085
	Dust cover	440K-A17182

Approximate Dimensions

Figure 117 - Elf Miniature Tongue Interlock Switch Dimensions [mm (in.)]

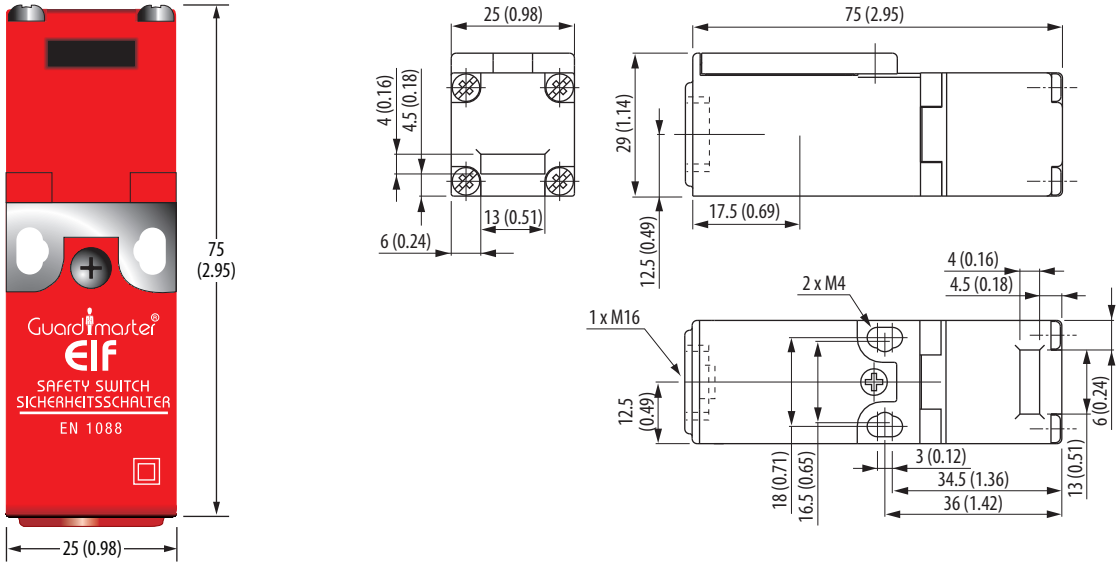

Typical Wiring Diagrams

Description		1 N.C. and 1 N.O.	1 N.C.
Contact Configuration		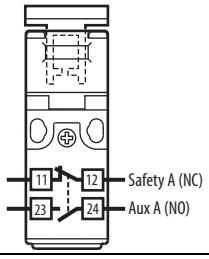	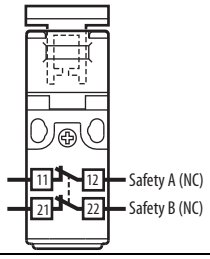
Contact Action □Open ■Closed		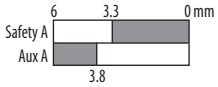 BBM	
4-pin Micro (M12) 	1 and 3	Safety A	Safety A
	2 and 4	Aux A	Safety B
5-pin Micro (M12) For ArmorBlock® Guard I/O™ 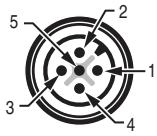	1 and 2	–	Safety A
	3		–
	4 and 5		Safety B
Cordset 889D-F4AC-*x* (1)	Brown	Safety A	Safety A
	Blue		
	White	Aux A	Safety B
	Black		

(1) *x* = 2 (2 m [6.6 ft]), 5 (5 m [16.4 ft]), or 10 (10 m [32.8 ft]) for standard cable lengths.

Cadet 3 Tongue Interlock Switches

The Cadet™ 3 tongue interlock switches have the following features:

- Compact size
- Ideal for small, lightweight guards
- Contacts: 2 N.C. and 1 N.O. or 3 N.C.
- Sealed to IP67
- Eight possible actuator entry points, easy to install
- Industry standard fixing centers to DIN 50047
- GD2 style available for difficult applications

Specifications

Attribute	Cadet 3 Tongue Interlock Switches			
Safety Ratings				
Standards	ISO 14119, IEC 60947-5-1			
Safety classification	Type 2 Interlocking Device per ISO 14119			
Functional safety data	See Rockwell Automation Functional Safety Data Sheet, publication SAFETY-SR001			
Certifications	cULus Listed, TÜV Certified, UKCA Marked for all applicable regulations, CE Marked for all applicable EU directives rok.auto/certifications			
Outputs				
Safety contacts[1] Direct Opening Action	2 N.C.		3 N.C.	
Auxiliary contacts	1 N.O.		None	
Thermal current/ $_{Ith}$	10 A			
Rated insulation voltage (U_i)	500V			
Switching current at voltage	3 mA at 18V DC, min			
Utilization Category				
A600/AC-15 (Ue)	600V	500V	240V	120V
A600/AC-15 (Ie)	1.2 A	1.4 A	3.0 A	6.0 A
DC-13 (Ue)	24V			
DC-13 (Ie)	2 A			
Operating Characteristics				
Break contact force	15 N (3.37 lbf), min			
Actuation speed, max [mm/s (in/s)]	160 (6.29)			
Actuation frequency, max	2 cycles/s			
Operating radius, min [mm (in.)]	150 (5.9) [60 (2.36) with GD2 kit]			
Mechanical Life	1,000,000 operations			
Environmental				
Enclosure type rating	IP67			
Operating temperature [°C (°F)]	-20...+80 (-4...+176)			
Physical Characteristics				
Material	• Housing: UL approved glass-filled PBT • Actuator: Stainless steel			
Weight [g (lb)]	80 (0.176)			
Color	Red			

(1) The safety contacts are described as normally closed (N.C.), for example, with the guard closed, the actuator in place (where relevant) and the machine able to be started.

Product Selection

Contact			Actuator Type	Cat. No.			
				M16 Conduit		Connector[1]	
Safety	Auxiliary	Action		M16	1/2 inch NPT Adapter	Connect to Distribution Box 6-pin Micro (M12)	Connect to ArmorBlock Guard I/O 5-pin Micro (M12)[2]
3 N.C.	–	–	Flat	440K-C21096	440K-C21048	440K-C21090	440K-C2NNFPS
			90°	440K-C21097	440K-C21057	440K-C21091	–
			GD2 Metal alignment guide w/semi-flex actuator	–	440K-C21062	440K-C21092	440K-C2NNAPS
			–	440K-C21070	–	–	–
2 N.C.	1 N.O.	BBM	Flat	440K-C21098	440K-C21050	440K-C21054	–
			90°	440K-C21061	440K-C21058	440K-C21067	–
			GD2 metal alignment guide w/semi-flexible actuator	–	440K-C21074	440K-C21088	–
			–	440K-C21055	–	–	–
		MBB	Flat	440K-C21052	440K-C21093	440K-C21060	
			90°	440K-C21065	440K-C21094	440K-C21068	
			GD2 Metal alignment guide w/semi-flex actuator	–	440K-C21095	440K-C21089	–
			–	440K-C21080	–	–	–

(1) For connector ratings, see Table 59 on page 100.
(2) With a 5-pin micro (M12) connector, not all contacts are connected. See Typical Wiring Diagrams on page 106 for wiring details.

Table 60 - Connection Systems

Description	Cat. No.	
	6-pin Micro (M12)	5-pin Micro (M12)
Cordset	889R-F6ECA-x [1]	–
Patchcord	889R-F6ECRM-y [2]	889D-F5ACDM-x [1]
Distribution box	898R-P68MT-A5	–
Shorting plug	898R-61MU-RM	–

(1) x = 2 (2 m [6.6 ft]), 5 (5 m [16.4 ft]), or 10 (10 m [32.8 ft]) for standard cable lengths.
(2) y = 1 (1 m [3.3 ft]), 2 (2 m [6.6 ft]), 3 (3 m [9.8 ft]), 5 (5 m [16.4 ft]), or 10 (10 m [32.8 ft]) for standard cable lengths.

Accessories

Description		Cat. No.
	Flat actuator, not to be used with metal alignment guide	440K-A21014
	90° actuator, not to be used with metal alignment guide	440K-A21006
	Metal alignment guide with semi-flexible actuator	440K-A21030

Description		Cat. No.
	Replacement cover	440A-A21115
	Dust cover	440K-A17182

Approximate Dimensions

Figure 118 - Cadet 3 Tongue Interlock Switch Dimensions [mm (in.)]

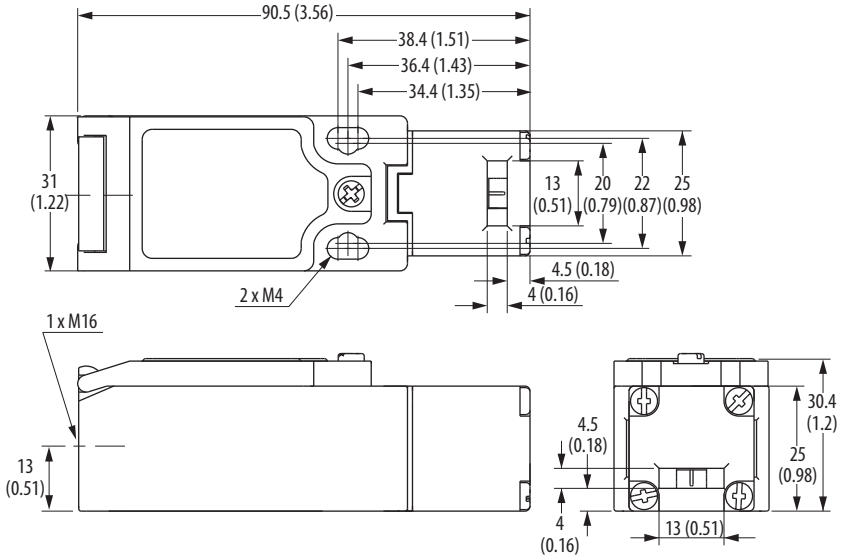

Typical Wiring Diagrams

Description		2 N.C. and 1 N.O.	3 N.C.
Contact Configuration		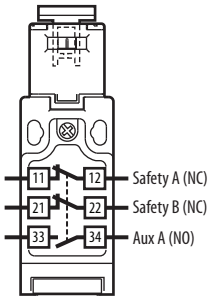	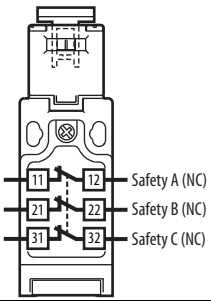
Contact Action ☐Open ■Closed		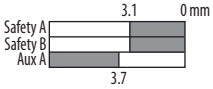 BBM 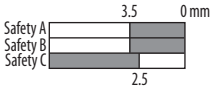 MBB	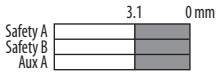
6-pin AC Micro (M12) 	1 and 5	Safety A	Safety A
	2 and 6	Safety B	Safety B
	3 and 4	Aux A	Safety C
5-pin Micro (M12) 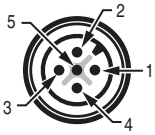	1 and 2	–	Safety A
	3		–
	4 and 5		Safety B
Cordset 889R-F6ECA-x (1)	Red/White	Safety A	Safety A
	Red/Black		
	Red	Safety B	Safety B
	Red/Blue		
	Green	Aux A	Safety C
	Red/Yellow		

(1) *x* = 2 (2 m [6.6 ft]), 5 (5 m [16.4 ft]), or 10 (10 m [32.8 ft]) for standard cable lengths.

Trojan T15 Tongue Interlock Switches

The Trojan™ T15 tongue interlock switches have the following features:

- Compact size, 75 x 52 x 32 mm (2.95 x 2.05 x 1.26 in.) case.
- 30 N actuator retention force
- Strong and versatile, can be used in most applications.
- Contacts: 2 N.C. safety or 1 N.C. safety and 1 N.O. auxiliary.
- GD2 style available for difficult applications

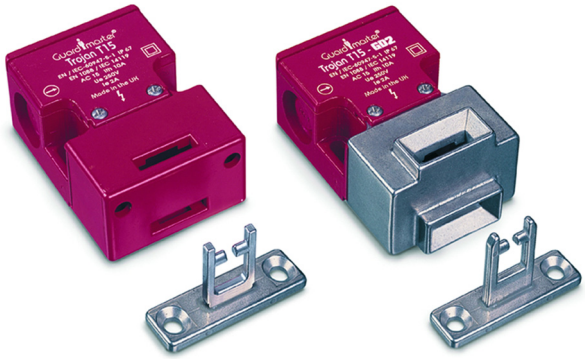

Specifications

Attribute	Trojan T15 Tongue Interlock Switches			
Safety Ratings				
Standards	ISO 14119, IEC 60947-5-1			
Safety classification	Type 2 Interlocking Device per ISO 14119			
Functional safety data	See Rockwell Automation Functional Safety Data Sheet, publication SAFETY-SR001			
Certifications	cULus Listed, TÜV Certified, UKCA Marked for all applicable regulations, CE Marked for all applicable EU directives rok.auto/certifications			
Outputs				
Safety contacts[1] Direct opening action	2 N.C.		2 N.C.	
Auxiliary contacts	None		1 N.O.	
Thermal current/$_{Ith}$	10 A			
Rated insulation voltage (U_i)	2500V			
Switching current at voltage	3 mA at 18V DC, min			
Utilization Category				
A600/AC-15 (Ue)	600V	500V	240V	120V
A600/AC-15 (Ie)	1.2 A	1.4 A	3.0 A	6.0 A
DC-13 (Ue)	24V			
DC-13 (Ie)	2 A			
Operating Characteristics				
Break contact force	30 N (6.70 lbf), min			
Actuation speed, max [mm/s (in/s)]	160 (6.29)			
Actuation frequency, max	2 cycles/s			
Operating radius, min [mm (in.]	175 (6.89) [60 (2.36) with GD2 kit]			
Mechanical life	1,000,000 operations			
Environmental				
Enclosure type rating	IP67			
Operating temperature [°C (°F)]	-20...+80 (-4...+176)			
Physical Characteristics				
Material	• Housing: UL approved glass-filled PBT • Actuator: Stainless steel			
Weight [g (lb)]	120 (0.265)			
Color	Red			

(1) The safety contacts are described as normally closed (N.C.) for example, with the guard closed, the actuator in place (where relevant) and the machine able to be started.

Product Selection

Type	Contact		Contact Action	Actuator Type	Cat. No.			
					M20 Conduit		Connector (1)	
	Safety	Auxiliary			M20	1/2 inch NPT Adapter	Connect to Distribution Box 4-pin Micro (M12)	Connect to ArmorBlock Guard I/O 5-pin Micro (M12)
Trojan T15 standard switch	2 N.C.	–	–	Standard	440K-T11303	440K-T11267	440K-T11307	440K-V2NNSPS
				Fully flexible	440K-T11395	440K-T11273	440K-T11384	440K-V2NNBPS
				–	440K-T11269	–	440K-T11385	–
	1 N.C.	1 N.O.	BBM	Standard	440K-T11305	440K-T11268	440K-T11386	–
				Fully flexible	440K-T11396	440K-T11276	440K-T11387	–
				–	440K-T11270	–	440K-T11388	–
Trojan T15 GD2 switch	2 N.C.	–	–	GD2 standard	440K-T11463	440K-T11288	440K-T11389	440K-V2NNGPS-NG
				Fully flexible	440K-T11397	440K-T11287	440K-T11390	–
				–	440K-T11280	–	440K-T11391	–
	1 N.C.	1 N.O.	BBM	GD2 standard	440K-T11398	440K-T11284	440K-T11392	–
				Fully flexible	440K-T11399	440K-T11283	440K-T11393	–
				–	440K-T11279	–	440K-T11394	–

(1) For connector ratings, see Table 59 on page 100.

Table 61 - Connection Systems

Description	Cat. No.		
	Connection to Distribution Box 4-pin Micro (M12)		Connection to ArmorBlock Guard I/O 5-pin Micro (M12)
	1 N.C. and 1 N.O.	2 N.C.	2 N.C.
Cordset	889D-F4AC-x (1)	889D-F4AC-x (1)	–
Patchcord	889D-F4ACDM-y (2)	889D-F4ACDM-y (2)	889D-F5ACDM-x (1)
Distribution box	898D-4zKT-DM4 (3)	898D-4zLT-DM4 (3)	–
Shorting plug	898D-41KU-DM	898D-41LU-DM	–
T-port	898D-43KY-D4	898D-43LY-D4	–

(1) *x* = 2 (2 m [6.6 ft]), 5 (5 m [16.4 ft]), or 10 (10 m [32.8 ft]) for standard cable lengths.
(2) *y* = 1 (1 m [3.3 ft]), 2 (2 m [6.6 ft]), 3 (3 m [9.8 ft]), 5 (5 m [16.4 ft]), or 10 (10 m [32.8 ft]) for standard cable lengths.
(3) *z* = 4 or 8 for number of ports.

Accessories

Description		To Be Used With	Cat. No.
	Standard actuator	Trojan T15 standard models only	440K-A11238
	GD2 standard actuator	Trojan GD2 models only	440G-A27011
	GD2 flat actuator	Trojan GD2 models only	440K-A11112
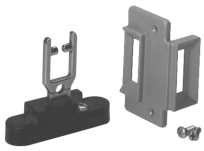	Alignment guide with semi-flexible actuator	Discard alignment guide for GD2 models	440K-A11144
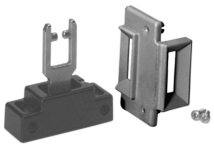	Alignment guide with fully flexible actuator	Discard alignment guide for GD2 models	440K-A27010
	Sliding bolt actuator	Trojan GD2 models only	440G-A27163
	Catch and retainer kit	Trojan T15 standard models only	440K-A11094
	Replacement cover	All models	440A-A11499
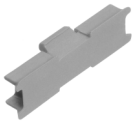	Dust cover	All models	440K-A17180

Approximate Dimensions

Figure 119 - Trojan T15 Tongue Interlock Switch Dimensions [mm (in.)]

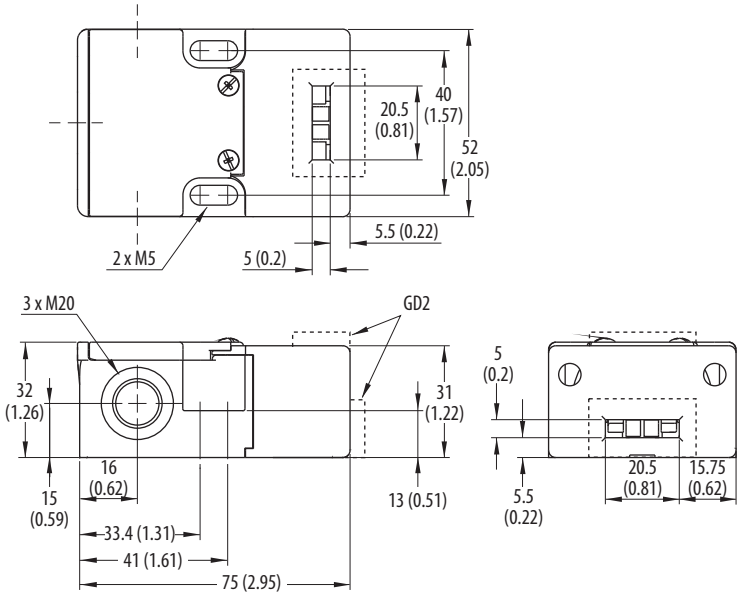

Typical Wiring Diagrams

Description		1 N.C. and 1 N.O.	1 N.C.
Contact Configuration		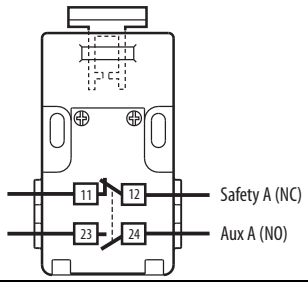	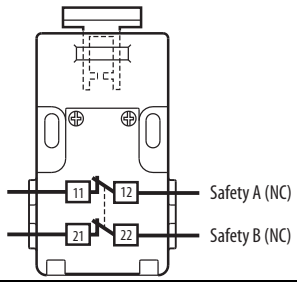
Contact Action □ Open ■ Closed		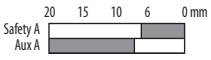 BBM	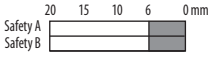
4-pin Micro (M12) 	1 and 3	Safety A	Safety A
	2 and 4	Aux A	Safety B
5-pin Micro (M12) 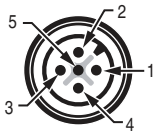	1 and 2	–	Safety A
	3		–
	4 and 5		Safety B
Cordset 889D-F4AC-*x* (1)	Brown	Safety A	Safety A
	Blue		
	White	Aux A	Safety B
	Black		

(1) *x* = 2 (2 m [6.6 ft]), 5 (5 m [16.4 ft]), or 10 (10 m [32.8 ft]) for standard cable lengths.

Trojan 5 and 6 Universal Tongue Interlock Switches

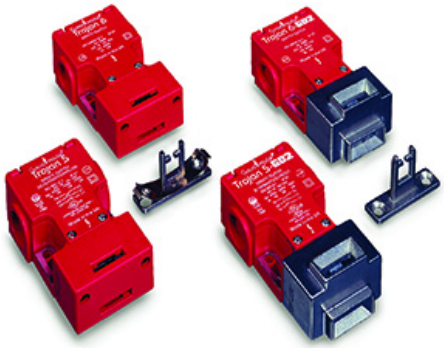

The Trojan 5 and 6 Universal Tongue Interlock Switches have the following features:

- Strong and versatile, can be used in most applications
- Self-ejecting tamper resistant actuator, only operates when mounted to the guard (not with GD2 models)
- Four possible actuator entry points, easy to install
- GD2 style available for difficult applications

Specifications

Attribute	Trojan 5 and 6 Universal Tongue Interlock Switches			
Safety Ratings				
Standards	ISO 14119, IEC 60947-5-1			
Safety classification	Type 2 Interlocking Device per ISO 14119			
Functional safety data	See Rockwell Automation Functional Safety Data Sheet, publication SAFETY-SR001			
Certifications	cULus Listed, TÜV Certified, UKCA Marked for all applicable regulations, CE Marked for all applicable EU directives rok.auto/certifications			
Outputs				
Safety contacts[1] Direct opening action	3 N.C.	2 N.C.	2 N.C.	
Auxiliary contacts	1 N.O.	2 N.O.	1 N.O.	
Thermal current/$_{Ith}$	10 A			
Rated insulation voltage (U_i)	500V			
Switching current at voltage	3 mA at 18V DC, min			
Utilization Category: Trojan 5 Switch				
A300/AC-15 (Ue)	240V	120V		
A300/AC-15 (Ie)	3 A	6 A		
DC-13 (Ue)	24V	24V		
DC-13 (Ie)	2 A			
Utilization Category: Trojan 6 Switch				
A600/AC-15 (Ue)	600V	500V	240V	120V
A600/AC-15 (Ie)	1.2 A	1.4 A	3 A	6 A
DC-13 (Ue)	24V			
DC-13 (Ie)	2 A			
Operating Characteristics				
Break contact force				
Trojan 5 switch	12 N (2.7 lbf) and 30 N (6.75 lbf)			
Trojan 6 switch	20 N (4.5 lbf)			
Actuation speed, max [mm/s (in/s)]	160 (6.29)			
Actuation frequency, max	2 cycles/s			
Operating radius, min [mm (in.)]	175 (6.89) [60 (2.36) with flexible actuator]			
Mechanical life	1,000,000 operations			
Environmental				
Enclosure type rating	IP67			
Operating temperature [°C (°F)]	-20...+80 (-4...+176)			
Physical Characteristics				
Material	• Housing: UL approved glass-filled PBT • Actuator: Stainless steel			
Weight [g (lb)]	160 (0.35)			
Color	Red			

(1) The safety contacts are described as normally closed (N.C.) for example, with the guard closed, the actuator in place (where relevant) and the machine able to be started.

Product Selection

Table 62 - Trojan 5 Switch

Type	Contact			Actuator Type	Cat. No.			
					M20 Conduit		Connector[1]	
	Safety	Auxiliary	Action		M20	1/2 inch NPT Adapter	5-pin Micro (M12) QD [2]	6-pin Micro (M12) QD
Trojan 5 standard switch	2 N.C.	1 N.O.	BBM	Standard	440K-T11090	440K-T11202	440K-T11205	–
				Guide/semi-flexible	440K-T11110	440K-T11203	440K-T11206	–
				Guide/fully flexible	440K-T11467	440K-T11204	440K-T11207	440K-T2NNBPS
				–	440K-T11089	–	440K-T11129	–
			BBM Gold Contacts	Standard	440K-T11085	–	–	–
			MBB	Standard	440K-T11118	440K-T11208	440K-T11224	–
				Guide/semi-flexible	440K-T11123	440K-T11209	440K-T11363	–
				Guide/fully flexible	440K-T11468	440K-T11210	440K-T11364	–
				–	440K-T11146	440K-T11469	440K-T11365	–
Trojan 5 GD2 switch			BBM	GD2 standard	440K-T11336	440K-T11211	440K-T11366	440K-T2NNGPS-NG
				Guide/semi-flexible	440K-T11337	440K-T11212	440K-T11367	–
				Guide/fully flexible	440K-T11338	440K-T11213	440K-T11368	–
				–	440K-T11147	–	440K-T11226	–
			MBB	GD2 standard	440K-T11339	440K-T11470	440K-T11369	–
				Guide/semi-flexible	440K-T11340	440K-T11471	440K-T11370	–
				Guide/fully flexible	440K-T11341	440K-T11472	440K-T11371	–
				–	440K-T11167	–	440K-T11372	–
Trojan 5 30 N switch			BBM	Standard	440K-T11333	440K-T91024	440K-T11492	–

(1) For connector ratings, see Table 59 on page 100.
(2) With a 5-pin micro (M12) connector, not all contacts are connected. See Typical Wiring Diagrams on page 115 for wiring details.

Table 63 - Trojan 6 Switch

Type	Contact			Actuator Type	Cat. No.		
					M20 Conduit		Connector[1]
	Safety	Auxiliary	Action		M20	1/2 inch NPT Adapter	8-pin Micro (M12)[2]
Trojan 6 switch	3 N.C.	1 N.O.	BBM	Standard	440K-T11171	440K-T11435	–
				–	440K-T11449	440K-T11408	–
	2 N.C.	2 N.O.	BBM	Standard	440K-T11174	440K-T11438	–
				–	440K-T11452	440K-T11416	440K-W21BNPH
			MBB	–	440K-T11453	440K-T11454	440K-W21MNPH
Trojan 6 GD2 switch	3 N.C.	1 N.O.	BBM	GD2 standard	440K-T11418	440K-T11466	–
				–	440K-T11188	440K-T11444	–
			MBB	–	440K-T11456	440K-T11457	–
	2 N.C.	2 N.O.	BBM	GD2 standard	440K-T11445	440K-T11425	–
				–	440K-T11459	440K-T11433	440K-W21BNPH-NG
			MBB	–	440K-T11460	440K-T11461	440K-W21MNPH-NG

(1) For connector ratings, see Table 59 on page 100.
(2) With an 8-pin micro (M12) connector, not all contacts are connected. See Typical Wiring Diagrams on page 115 for wiring details.

Table 64 - Connection Systems

Description	Cat. No.		
	Trojan 5 Switch		Trojan 6 Switch
	5-pin Micro (M12)	6-pin Micro (M12)	8-pin Micro (M12)
Cordset	–	889R-F6ECA-*x* (1)	889D-F8AB-*x* (1)
Patchcord	889D-F5ACDM-x (1)	889R-F6ECRM-*y* (2)	889D-F8ABDM-*y* (2)
Distribution box	–	898R-P68MT-A5	–
Shorting plug	–	898R-61MU-RM	–
T-port	–	–	–

(1) *x* = 2 (2 m [6.6 ft]), 5 (5 m [16.4 ft]), or 10 (10 m [32.8 ft]) for standard cable lengths.
(2) *y* = 1 (1 m [3.3 ft]), 2 (2 m [6.6 ft]), 3 (3 m [9.8 ft]), 5 (5 m [16.4 ft]), or 10 (10 m [32.8 ft]) for standard cable lengths.

Accessories

Description		To Be Used With	Cat. No.
	Standard actuator	Trojan 5 and Trojan 6. Not to be used with GD2 models	440K-A11095
	GD2 standard actuator	GD2 models only	440G-A27011
	GD2 flat actuator	GD2 models only	440K-A11112
	Alignment guide with semi-flexible actuator	Discard alignment guide for GD2 models	440K-A11144
	Alignment guide with fully flexible actuator	Discard alignment guide for GD2 models	440K-A27010
	Sliding bolt actuator	GD2 models only	440G-A27163
	Catch and retainer kit	Trojan 5 and Trojan 6. Not to be used with GD2 models.	440K-A11094
	Replacement cover	Trojan T5 standard model only	440A-A11495
		Trojan T5 GD2	440A-A11496
		Trojan T6 standard model only	440A-A11497
		Trojan T6 GD2	440A-A11498
	Dust cover	All models	440K-A17180

Approximate Dimensions

Figure 120 - Standard Model [mm (in.)]

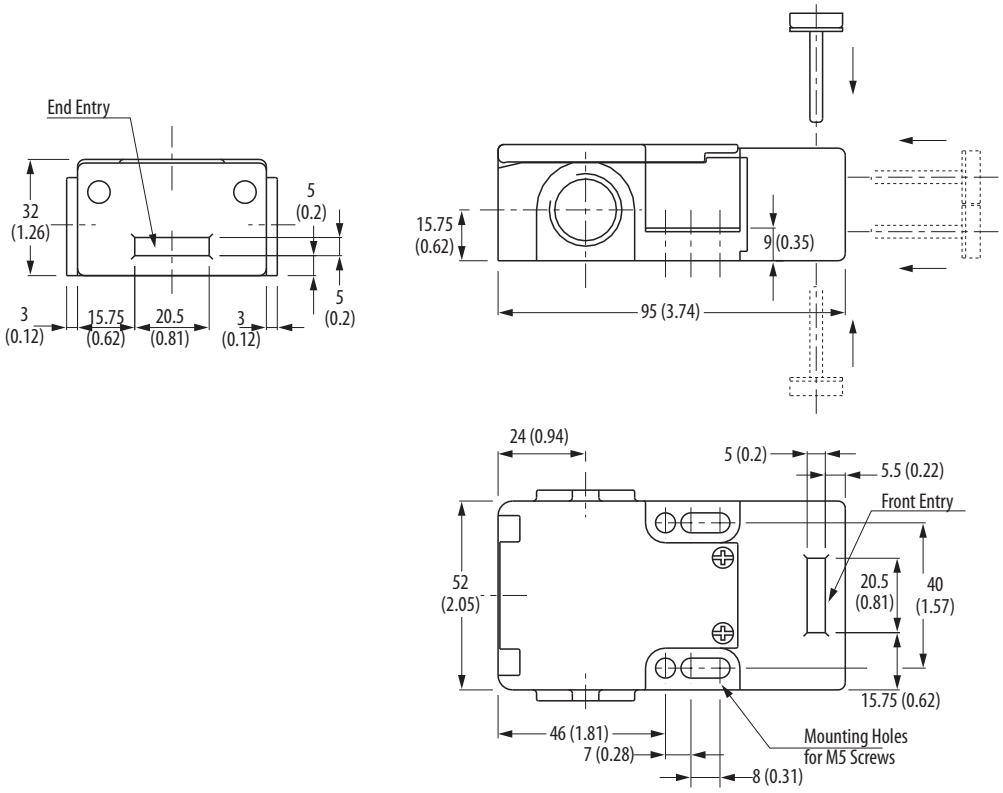

Figure 121 - GD2 Model [mm (in.)]

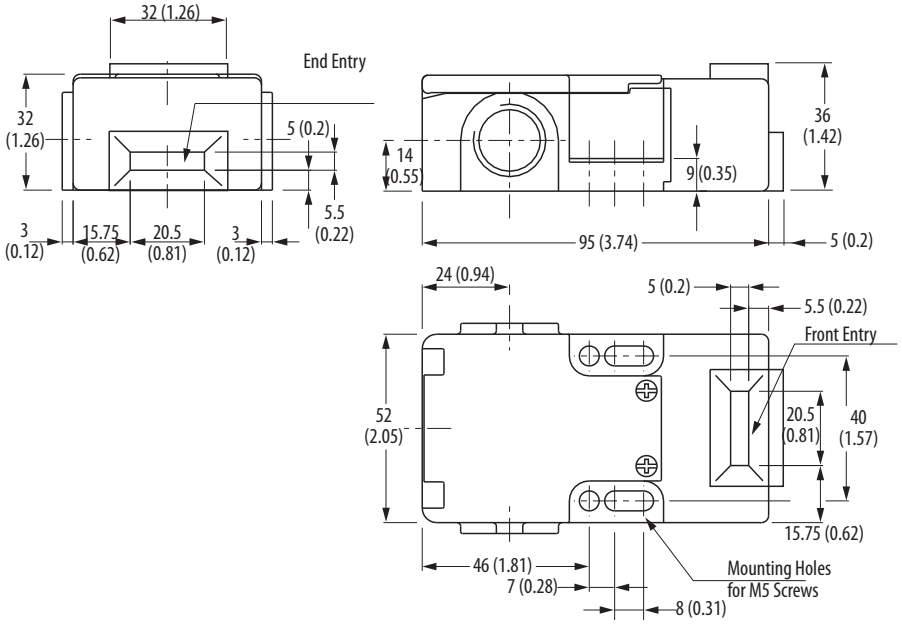

Typical Wiring Diagrams

Description		Trojan 5	Trojan 6	
		2 N.C. and 1 N.O.	2 N.C. and 2 N.O.	3 N.C. and 1 N.O.
Contact Configuration		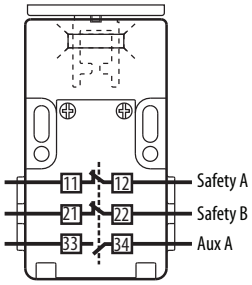	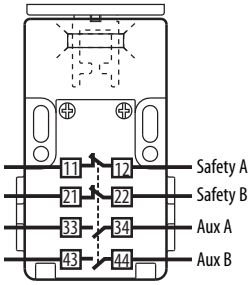	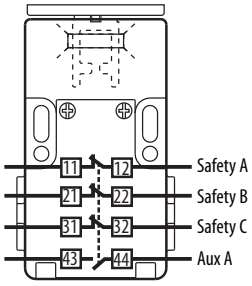
Contact Action □ Open ■ Closed		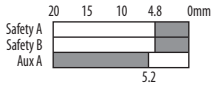 BBM	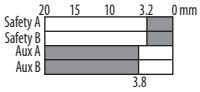 BBM	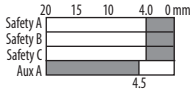 BBM
		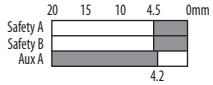 MBB	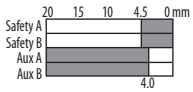 MBB	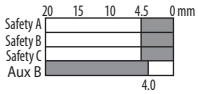 MBB
6-pin AC Micro (M12) 	1 and 5	Safety A	–	–
	2 and 6	Safety B		
	3 and 4	Aux A		
5-pin Micro (M12) for ArmorBlock Guard I/O 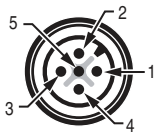	1 and 2	Safety A	–	–
	3	–		
	4 and 5	Safety B		
8-pin Micro (M12) 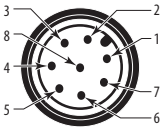	1 and 7	–	Aux A	–
	2 and 3		–	
	4 and 6		Safety B	
	5 and 8		Safety A	
6-pin Cordset 889R-F6ECA-x (1)	Red/White	Safety A	–	–
	Red/Black			
	Red	Safety B	–	–
	Red/Blue			
	Green	Aux	–	–
	Red/Yellow			
8-pin Cordset 889D-F8AB-x (1)	Gray Red	–	Safety A	–
	Yellow Pink	–	Safety B	–
	White Blue	–	Aux A	–
	Green Brown	–	–	–

(1) *x* = 2 (2 m [6.6 ft]), 5 (5 m [16.4 ft]), or 10 (10 m [32.8 ft]) for standard cable lengths.

MT-GD2 Tongue Interlock Switches

The MT-GD2 tongue interlock switches have the following features:

- Strong and versatile, can be used in most applications
- Eight possible actuator entry points, easy to install
- Variety of contact configurations
- Snap acting MT-GD2 switch gives a minimum break contact force of 40 N
- Optional latch release styles
- Industry standard fixing centers to DIN/EN50041

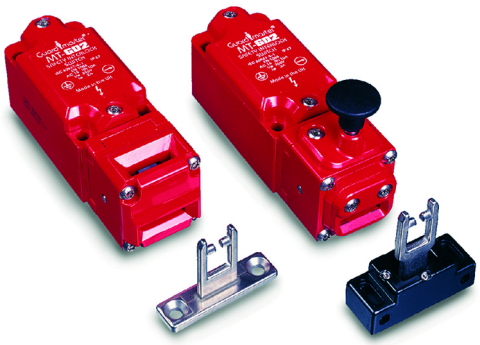

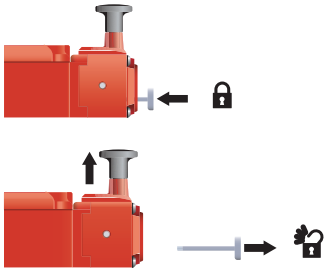

MT-GD2 Latch Release Style

Specifications

Attribute	MT-GD2 Tongue Interlock Switches			
Safety Ratings				
Standards	ISO 14119, IEC 60947-5-1			
Safety classification	Type 2 Interlocking Device per ISO 14119			
Functional safety data	See Rockwell Automation Functional Safety Data Sheet, publication SAFETY-SR001			
Certifications	cULus Listed, TÜV Certified, UKCA Marked for all applicable regulations, CE Marked for all applicable EU directives rok.auto/certifications			
Outputs				
Safety contacts(1)	• Standard: 3 N.C. or 2 N.C. direct opening action • Snap acting: 2 N.C. direct opening forced disconnection			
Auxiliary Contacts				
Standard	1 N.O. or 2 N.O.			
Snap acting	2 N.O.			
Thermal current/$_{Ith}$	10 A			
Rated insulation voltage (U_i)	500V			
Switching current at voltage	3 mA at 18V DC, min			
Utilization Category				
A600/AC-15 (Ue)	600V	500V	240V	120V
A600/AC-15 (Ie)	1.2 A	1.4 A	3.0 A	6.0 A
Standard: DC-13 (Ue)	24V	–	–	–
Standard: DC-13 (Ie)	2 A	–	–	–
Snap-acting: A300/AC-15 (Ue)	240V	120V	–	–
Snap-acting: A300/AC-15 (Ie)	3 A	6 A	–	–
Snap-acting: DC-13 (Ue)	24V	–	–	–
Snap-acting: DC-13 (Ie)	2 A	–	–	–

Attribute	MT-GD2 Tongue Interlock Switches
Operating Characteristics	
Break contact force, min	
BBM and MBB	12 N (2.7 lbf)
BBM and extended flat actuator	32 N (7.2 lbf)
Snap acting	40 N (9.0 lbf)
Actuation speed, max [mm/s (in/s)]	160 (6.29)
Actuation frequency, max	2 cycles/s
Mechanical life	1,000,000 operations
Environmental	
Enclosure type rating	IP67
Operating temperature [°C (°F)]	-20...+80 (-4...+176)
Physical Characteristics	
Material	• Housing: Painted zinc • Actuator: Stainless steel
Weight [g (lb)]	520 (1.15)
Color	Yellow or red

(1) The safety contacts are described as normally closed (N.C.) for example, with the guard closed, the actuator in place (where relevant) and the machine able to be started.

Product Selection

Table 65 - Red Body Switches

Type	Contact			Actuator Type	Cat. No.				
					Conduit		Connector (1)		
	Safety	Auxiliary	Action		M20	1/2 inch NPT	12-pin M23	8-pin Micro (M12) (2)	Connect to ArmorBlock Guard I/O 5-pin Micro (M12) (3)
MT-GD2	3 N.C.	1 N.O.	BBM	–	440K-MT55002	440K-MT55085	440K-MT55094	–	–
				GD2 standard	440K-MT55074	440K-MT55022	440K-MT55095	–	–
				Fully flexible	440K-MT55075	440K-MT55029	440K-MT55096	–	–
			MBB	–	440K-MT55004	440K-MT55088	440K-MT55100	–	–
	2 N.C.	2 N.O.	BBM	–	440K-MT55005	440K-MT55086	440K-MT55097	440K-M21BNDH	–
				GD2 standard	440K-MT55076	440K-MT55026	440K-MT55098	–	–
				Fully flexible	440K-MT55077	440K-MT55087	440K-MT55099	–	–
			MBB	–	440K-MT55006	440K-MT55089	440K-MT55101	–	–
			Snap Acting	–	–	440K-M22ANDT	440K-M22ANDL	440K-M21ANDH	440K-M2NNNDS
				Extended flat	440K-M22AEDM	440K-M22AEDT	–	–	–
				GD2 standard	440K-M22ASDM	440K-M22ASDT	–	–	–
				Fully flexible	440K-M22ABDM	440K-M22ABDT	–	–	–
MT-GD2 latch release	3 N.C.	1 N.O.	BBM	–	440K-MT55039	440K-MT55062	440K-MT55042	–	–
				GD2 standard	440K-MT55078	440K-MT55041	440K-MT55070	–	–
				Fully flexible	440K-MT55079	440K-MT55045	440K-MT55103	–	–
			MBB	–	440K-MT55082	440K-MT55091	440K-MT55106	–	–
	2 N.C.	2 N.O.	BBM	–	440K-MT55063	440K-MT55065	440K-MT55066	440K-M21BNDH-N5	440K-M2NNNDS-N5
				GD2 standard	440K-MT55080	440K-MT55050	440K-MT55104	–	–
				Fully flexible	440K-MT55081	440K-MT55051	440K-MT55052	–	–
			MBB	–	440K-MT55083	440K-MT55092	440K-MT55105	440K-M21MNDH-N5	–

(1) For connector ratings, see Table 59 on page 100.
(2) With an 8-pin micro (M12) connector, not all contacts are connected. See Typical Wiring Diagrams on page 119 for wiring details.
(3) With a 5-pin micro (M12) connector, not all contacts are connected. See Typical Wiring Diagrams on page 119 for wiring details.

Table 66 - Yellow Body Switches

Type	Contact			Actuator Type	Cat. No.		
					Conduit	Connector (1)	
	Safety	Auxiliary	Action		1/2-inch NPT	12-pin M23	5-pin Micro (M12) (2)
MT-GD2	2 N.C.	2 N.O.	Snap Acting	–	440K-M22ANYT	–	–
				Extended flat	440K-M22AEYT	440K-M22AEYL	440K-M2NAEYS
–	2 N.C.	2 N.O.	MBB	–	440K-M22MNYT-N5	–	440K-M2NNNYS-N5

(1) For connector ratings, see Table 59 on page 100.
(2) With a 5-pin micro (M12) connector, not all contacts are connected. See Typical Wiring Diagrams on page 119 for wiring details.

Table 67 - Connection Systems

Description	Cat. No.			
	4-pin Micro (M12)	5-pin Micro (M12)	8-pin Micro (M12)	12-pin M23
Cordset	889D-F4AC-*x* (1)	–	889D-F8AB-*x* (1)	889M-F12X9AE-*x* (1)
Patchcord	889D-F4ACDM-*y* (2)	889D-F5ACDM-*x* (1)	889D-F8ABDM-*y* (2)	–
Distribution box	898D-P4zLT-DM4 (3)	–	–	–
Shorting plug	898D-41LU-DM	–	–	–
T-port	898D-43LY-D4	–	–	–

(1) *x* = 2 (2 m (6.6 ft)), 5 (5 m [16.4 ft]), or 10 (10 m [32.8 ft]) for standard cable lengths.
(2) *y* = 1 (1 m [3.3 ft]), 2 (2 m [6.6 ft]), 3 (3 m [9.8 ft]), 5 (5 m [16.4 ft]), or 10 (10 m [32.8 ft]) for standard cable lengths.
(3) *z* = 4 or 8 for number of ports.

Accessories

Description		Cat. No.
	GD2 standard actuator	440G-A27011
	GD2 flat actuator	440K-A11112
	Fully flexible actuator	440G-A27143

Description		Cat. No.
	Sliding bolt actuator	440G-A27163
	Extended flat actuator	440K-A17116
	Dust cover	440K-A17180

Approximate Dimensions

Figure 122 - MT-GD2 [mm (in.)]

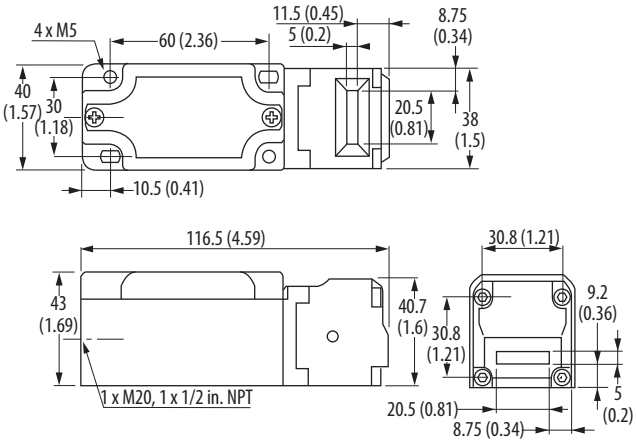

Figure 123 - MT-GD2 Latch Release [mm (in.)]

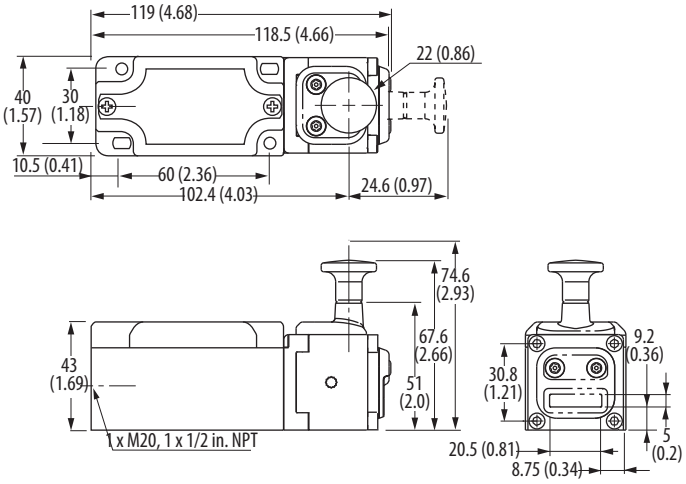

Typical Wiring Diagrams

Description		2 N.C. and 1 N.O.	2 N.C. and 2 N.O.	3 N.C. and 1 N.O.
Contact Configuration		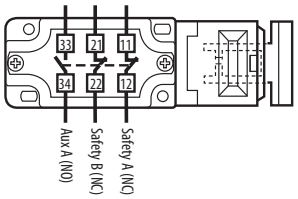	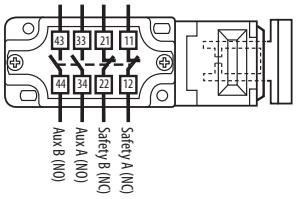	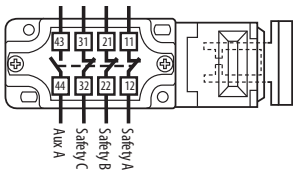
Contact Action □Open ■Closed		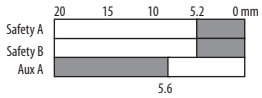 BBM	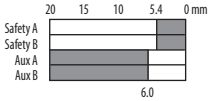 BBM	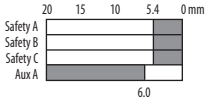 BBM
		–	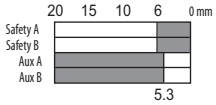 MBB	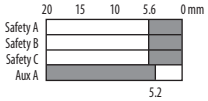 MBB
		–	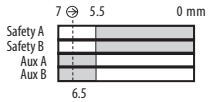 Snap Acting	–
5-pin Micro (M12) for ArmorBlock Guard I/O 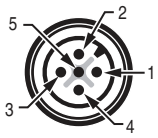	1 and 2	–	Safety A	–
	3		–	
	4 and 5		Safety B	
8-pin Micro (M12) 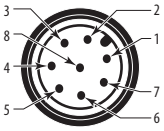	1 and 7	–	Aux A	–
	2		–	
	3		Ground	
	4 and 6		Safety B	
	5 and 8		Safety A	
12-pin Cordset 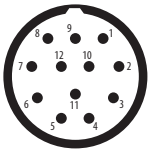	1 and 3	Safety A	Safety A	Safety A
	2, 5, and 11	Not connected	Not connected	Not connected
	4 and 6	Safety B	Safety B	Safety B
	7 and 8	N.C.	Aux A	Safety C
	9 and 10	Aux A	Aux B	Aux A
	12	Ground	Ground	Ground
8-pin Cordset 889D-F8AB-x (1)	Gray Red	–	Safety A	–
	Yellow Pink	–	Safety B	–
	White Blue	–	Aux A	–
	Green	–	Ground	–
	Brown	–	Not Used	–
12-pin Cordset 889M-F12X9AE-x (1)	Brown Blue	Safety A	Safety A	Safety A
	White Green	Safety B	Safety B	Safety B
	Yellow Gray	Not Used	Aux A	Safety C
	Pink Red	Aux A	Aux B	Aux A
	Green/Yellow	Ground	Ground	Ground

(1) *x* = 2 (2 m [6.6 ft]), 5 (5 m [16.4 ft]), or 10 (10 m [32.8 ft]) for standard cable lengths.

Notes:

Overview

Trapped key interlock switches can be configured to provide that a predetermined sequence of events takes place or that hazards have been reduced before operators can become exposed to them.

Trapped key interlock switches have the following features:

- Stainless-steel construction
- 90° key operation
- Compact, solid, and sturdy keys supplied with dust seals and coded tagging

Design Suggestions for an Interlocking System

Figure 124 - Plant and Machinery Interlocking

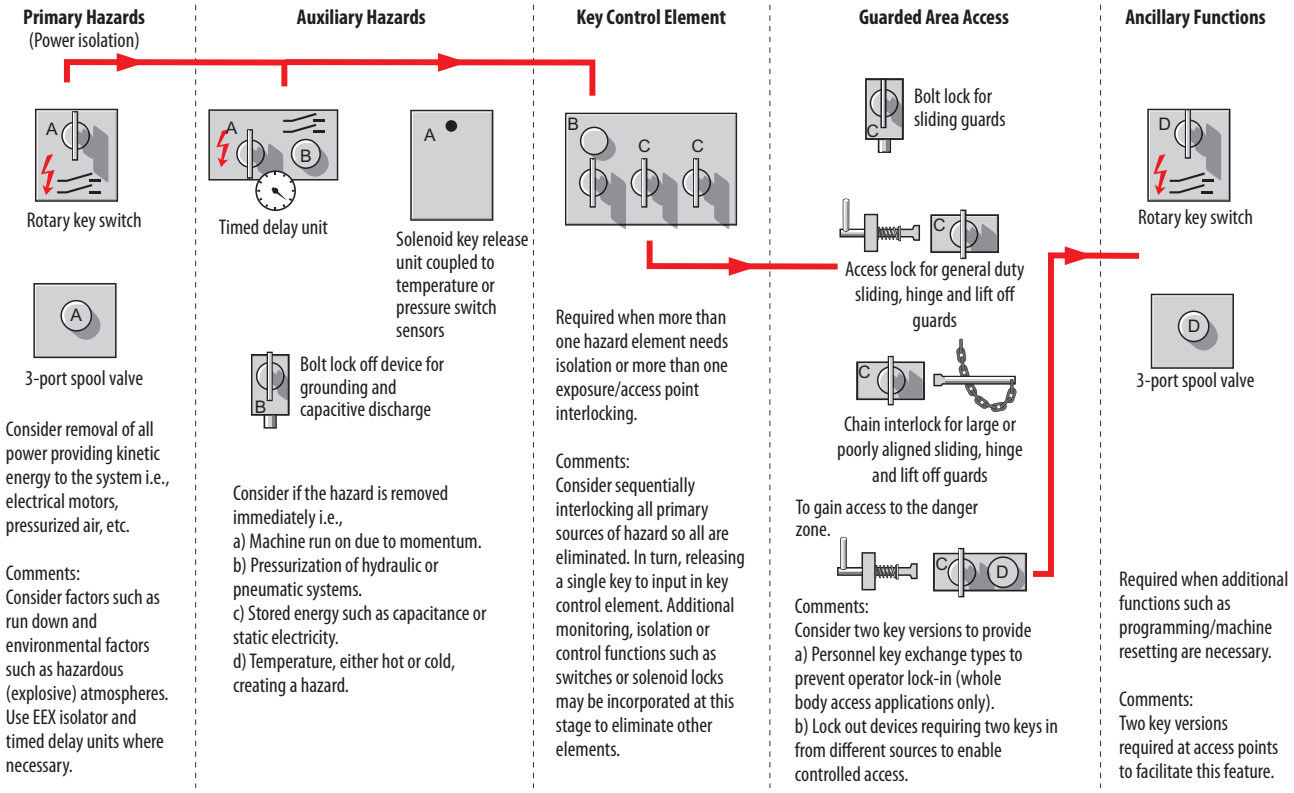

Figure 125 - Illustrated Principals of Trapped Key Interlocking

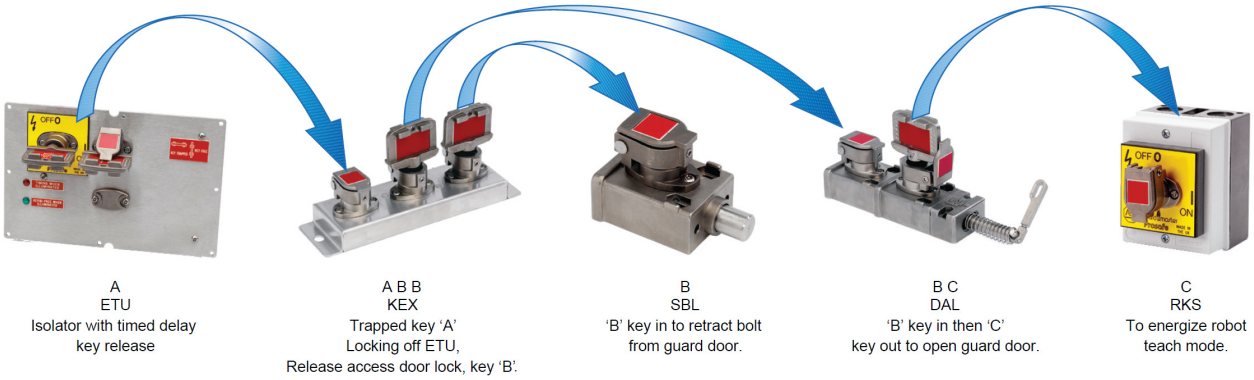

1. The Electronic Timed-delay Unit (ETU) isolator has two keys. One is a nonremovable key. The other key (an A coded key) can be removed after a timed duration, which a potentiometer inside the ETU isolator sets. Turn the nonremovable key to turn off the hazardous machine motion and start the timer. When the time expires, the Key Free light-emitting diode turns ON. Remove the A key.
2. Insert the A key into the Key Exchange Unit (KEX) and turn it 90°.
3. Turn one of the B keys 90° and remove it from the KEX. This action traps the A key in the KEX and helps prevent the restarting of the machine.
4. Insert the B key into the Single-key Bolt Lock (SBL) and turn it 90° to gain partial body access to the machine.
5. Turn the second B key 90° and remove it from the KEX. Removal of this key also traps the A key in the KEX and helps prevent the restarting of the machine.
6. Insert the B key into the Dual-key Access Lock (DAL) and turn it 90°.
7. Turn the C key 90° and remove the C key. To allow full body entry into the hazardous zone, rotate the access handle.
8. Take the C key into the hazardous zone, insert it into the rotary keyswitch (RKSE), and turn it 90° to send a signal to the machine control system that allows the machine to operate in a slow or teach mode.
9. To return the machine to full operational mode, reverse the process.

Table 68 - Bill of Materials

Item	Quantity	Description	Cat. No.
1	1	Single key time delayed with an A primary key	440T-MSTUE110A
2	1	Exchange unit, B primary key, two B secondary keys trapped (included)	440T-MKEXE110A0B0B
3	1	Single bolt lock, B primary key	440T-MSBLE100B
4	1	Dual access lock, B primary key, C secondary key trapped (included)	440T-MDALE100B0C
5	1	Rotary keyswitch, C primary code barrel	440T-MRKSE100C
6	1	A key	440T-AKEYE100A

Primary keys must be ordered separately, when not provided for by a previous sequential trapped key. In the previous example, only one primary key must be ordered separately. The remaining primary keys are provided by a previous sequential secondary (trapped) key.

Application Examples

Figure 126 - Part Body Access

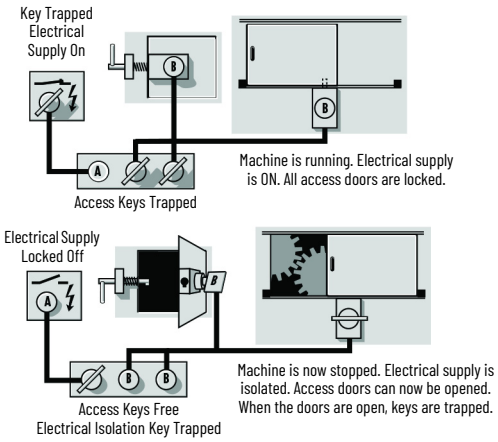

Figure 127 - Full Body Access

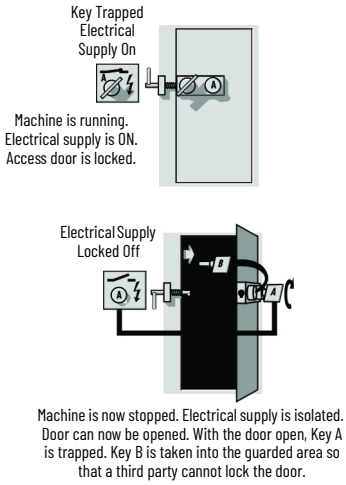

Code Selection

To order Prosafe® trapped key products, you must include codes in the catalog number.

- The codes are added to the end of the catalog number.
- Each code must be two or three characters in length.
- The first code is the primary code and the last codes, if necessary, are the secondary codes.
- Primary codes are not included. The key must be ordered separately or must come from a previous operation.
- Secondary codes come with the product, as the key is trapped in the code barrel.
- Use Table 71 on page 125 to select and track codes.

Table 69 - Order Example 1

440T	-	M	DALE	10	AA	AB
a		b	c	d	e	f

a	
Code	**Description**
440T	Bulletin number

b	
Code	**Description**
A	Accessory
M	Machine interlock

c	
Code	**Description**
DALE	Dual-key access lock

d	
Code	**Description**
10	Product feature

e	
Code	**Description**
AA	Primary code (1) (2)

f	
Code	**Description**
AB	Secondary code (1) (3)

(1) Order catalog number 440T-MDALE10AAAB to get a Dual key Access Lock with an AA primary code and an AB secondary code, with an AB key included.
(2) Key not included.
(3) Key included.

Table 70 - Order Example 2

440T	-	M	KEXE	16	AA	AB	AC	AC	AC
a		b	c	d	e	f	g	h	i

a	
Code	**Description**
440T	Bulletin number

b	
Code	**Description**
A	Accessory
M	Machine interlock

c	
Code	**Description**
KEXE	Dual-key access lock

d	
Code	**Description**
16	Product feature

e	
Code	**Description**
AA	Primary code (1) (2)

f	
Code	**Description**
AB	Primary code (1) (2)

g	
Code	**Description**
AC	Secondary code (1) (3)

h	
Code	**Description**
AC	Secondary code (1) (3)

i	
Code	**Description**
AC	Secondary code (1) (3)

(1) Order catalog number 440T-MKEXE16AAABACACAC to get a key exchange unit with AA and AB primary codes and three AC secondary codes. The AA and AB keys are not included. The three AC keys, which are trapped in the secondary code barrels, are included.
(2) Key not included.
(3) Key included.

Key Coding

Key codes are available in single, double, and triple letters. Available key codes are A...z, Aa...Zz, Aaa...Eac (first letter A...E; second letter a...f; third letter a...z). There are only 25 letters used - Q is not used.

Examples of key codes in a catalog string:
440T-MRPSE110A = key code A
440T-MRPSE11AA = key code Aa
440T-MRPSE113AAA= key code Aaa

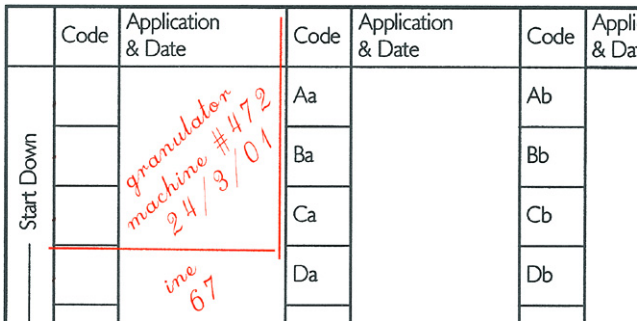

Table 71 is an example reference guide that is useful to select and track codes. Single letter codes are ordered with upper case letters. Labels with two or three letter codes have the first letter upper case and the remaining letters lower case.

Table 71 - Code Selection and Tracking

Code	Application Date	Code	Application Date	Code	Application Date	Code	Application Date	Code	Application Date	Code	Application Date
Aa		Ab		Ac		Ad		Ae		Af	
Ba		Bb		Bc		Bd		Be		Bf	
Ca		Cb		Cc		Cd		Ce		Cf	
Da		Db		Dc		Dd		De		Df	
Ea		Eb		Ec		Ed		Ee		Ef	
Fa		Fb		Fc		Fd		Fe		Ff	
Ga		Gb		Gc		Gd		Ge		Gf	
Ha		Hb		Hc		Hd		He		Hf	
Ia		Ib		Ic		Id		Ie		If	
Ja		Jb		Jc		Jd		Je		Jf	
Ka		Kb		Kc		Kd		Ke		Kf	
La		Lb		Lc		Ld		Le		Lf	
Ma		Mb		Mc		Md		Me		Mf	
Na		Nb		Nc		Nd		Ne		Nf	
Oa		Ob		Oc		Od		Oe		Of	
Pa		Pb		Pc		Pd		Pe		Pf	
Qa (1)		Qb (1)		Qc (1)		Qd (1)		Qe (1)		Qf (1)	
Ra		Rb		Rc		Rd		Re		Rf	
Sa		Sb		Sc		Sd		Se		Sf	
Ta		Tb		Tc		Td		Te		Tf	
Ua		Ub		Uc		Ud		Ue		Uf	
Va		Vb		Vc		Vd		Ve		Vf	
Wa		Wb		Wc		Wd		We		Wf	
Xa		Xb		Xc		Xd		Xe		Xf	
Ya		Yb		Yc		Yd		Ye		Yf	
Za		Zb		Zc		Zd		Ze		Zf	

(1) Key Code Q only available as Engineered to Order.

Rotary Switches

The rotary trapped key interlock switches have the following features:

- 316L stainless-steel keys
- Direct-drive operation — positively opens contacts
- Stainless-steel dust cap included
- Up to 100 A isolation
- 4 N.O., 2 N.O. and 2 N.C., 3 N.O./1 N.C., 3 N.O., or 3 N.C. and neutral contacts
- Replaceable code barrel assembly

Specifications

Attribute		Value			
Standards Classification (Safety)		EN ISO 14119 and GS-ET-31, and can be used in safety application up to category 3, PLd in accordance with EN ISO 13849-1, and in the application area of EN 60204-1.			
Functional Safety Data		PFHD = 1.00E-7 (probability of dangerous failure per hr); T1 = 20 (Proof test interval)			
Certifications		CE Marked for all applicable EU directives, UKCA Marked for all applicable regulations, TÜV Certified rok.auto/certifications			
Conduit entry		4 x M20 (RKS only)			
Operating temperature [°C (°F)]		-10...+40 (14...104) Enclosed: -25...+40 (-13...+104)			
Mechanical life		200,000 operations			
Shear force to key, max		15.1 kN (3394.62 lbf)			
Torque to key, max [N•m (lb•in)]		14 (10.33)			
Relative humidity		95%			
Finger protection		DIN 57106/VDE 0106 T.100			
Weight	RPSE	10, 11, 12, 13, 20: 500 g (1.1 lb)		14, 16: 1000 g (2.2 lb)	
	RKSE	10, 11, 12, 13: 850 g (1.9 lb)		14: 1250 g (2.8 lb)	
Climatic test		• Constant to DIN IEC 68 Part 2-3 • Variable to DIN IEC 68 Part 2-30			
Rated insulation voltage (U_i)		690V			
Rated impulse withstand voltage (U_{imp})		6 kV			
S3 intermittent rating duty factor (VDE 0530, Part 1)		60/40/25% = 1, 3/1, 6/2 xlu			
Last two digits of Cat. No. (See Product Selection on page 127.)		10, 11, 16	12	13	14
Rated uninterrupted current (Iu)	IEC/EN/VDE	20 A	32 A	63 A	100 A
	UL/CSA	16 A	30 A	60 A	100 A
Rated operational voltage (Ue)	EC/EN/VDE	690V	690V	690V	1000V
	UL/CSA	600V	600V	600V	600V
	Main switch isolation voltage, max	750V	750V	750V	1000V
Rated operating current (Ie)	AC-21A IEC/EN/VDE	20 A	32 A	63 A	100 A
	AC-1 SEV	20 A	32 A	63 A	100 A
Rated operational power at 50/60 Hz (AC-23A IEC/EN/VDE)	3-phase 220...240V	4 kW	7.5 kW	15 kW	22 kW
	3-pole 380...440V	7.5 kW	15 kW	30 kW	37 kW
	500...690V	7.5 kW	15 kW	30 kW	37 kW
Rated operational power at 50/60 Hz (AC-3A IEC/EN/VDE)	3-phase 220...240V	4 kW	7.5 kW	15 kW	22 kW
	3-pole 380...440V	5.5 kW	11 kW	22 kW	37 kW
	500...690V	5.5 kW	11 kW	22 kW	37 kW
DOL rating (UL/CSA)	3-phase 140V	1.5 HP	3 HP	5 HP	7.5 HP
	3-pole 240V	3 HP	10 HP	15 HP	30 HP
	480V	7.5 HP	20 HP	30 HP	50 HP
	600V	10 HP	20 HP	40 HP	50 HP
Rated breaking capacity	AC-23/AC-3 220...240V	250 A	330 A	500 A	600 A
	Motor switch 80...440V	250 A	330 A	500 A	600 A
	500...690V	150 A	220 A	270 A	600 A
Fuse rating (GI)	330 A	500 A	600 A		
Rated fuse short circuit current, max		25 A	35 A	63/50 A	100 A
Terminal cross section		1...10		4...16	2.5...3.5
		mm^2 single/multiple wire			

Attribute	Value		
Conductor size, mm^2 (min...max)	0.75 ...6	2.5...10	1.5...2.5
	(stranded) with sleeve		
	8 AWG	6 AWG	2 AWG

Product Selection

Table 72 - Enclosure-mounted IP65 (RKS only)

Contacts	Current	Cat. No. (1)	
		Standard	Engraved
4 N.O.	20 A	440T-MRKSE10*x*	440T-MRKSS10*x*
2 N.O. and 2 N.C.	20 A	440T-MRKSE11*x*	440T-MRKSS11*x*
4 N.O.	32 A	440T-MRKSE12*x*	440T-MRKSS12*x*
4 N.O.	63 A	440T-MRKSE13*x*	440T-MRKSS13*x*
3 N.O. and 1 N.O.	3 N.O. 100 A and 1 N.O. 20 A	440T-MRKSE14*x*	440T-MRKSS14*x*

(1) Substitute the desired primary code for *x* (key not included). See Key Coding on page 124 for code selection.

Table 73 - Panel Mounted

Contacts	Current	Cat. No. (1)	
		Standard	Engraved
4 N.O.	20 A	440T-MRPSE10*x*	440T-MRPSS10*x*
2 N.O. and 2 N.C.	20 A	440T-MRPSE11*x*	440T-MRPSS11*x*
4 N.O.	32 A	440T-MRPSE12*x*	440T-MRPSS12*x*
4 N.O.	63 A	440T-MRPSE13*x*	440T-MRPSS13*x*
3 N.O. and 1 N.O.	3 N.O. 100 A and 1 N.O. 20 A	440T-MRPSE14*x*	440T-MRPSS14*x*
8 N.O.	20 A	440T-MRPSE16*x*	440T-MRPSS16*x*
3 N.O. and 3 N.C.	20 A	440T-MRPSE18*x*	440T-MRPSS18*x*
4 N.O.	40 A	440T-MRPSE20*x*	440T-MRPSS20*x*

(1) Substitute the desired primary code for *x* (key not included). See Key Coding on page 124 for code selection.

Accessories

Figure 128 - Multi-key Isolator Rotary Switch

Table 74 - Multi-key Isolator Rotary Switches

Type	No. of Keys	Contacts	Current	Trapped Key Condition	Cat. No.	
					Standard	Engraved
Dual key isolator (1)	2 keys out	4 N.O.	20 A	Both keys are trapped (order separately) Rotate the isolator key 90° CCW to the off position Rotate the second key 90° CCW Remove both keys	440T-MMRSE10*xx* (2)	440T-MMRSS10*xx* (2)
		2 N.O. and 2 N.C.	20 A		440T-MMRSE11*xx* (2)	440T-MMRSS11*xx* (2)
		4 N.O.	32 A		440T-MMRSE12*xx* (2)	440T-MMRSS12*xx* (2)
		4 N.O.	63 A		440T-MMRSE13*xx* (2)	440T-MMRSS13*xx* (2)
Triple key isolator (1)	3 keys out	4 N.O.	20 A	All keys are trapped (order separately) Rotate the isolator key 90° CCW to the off position Rotate the second and third keys in sequence 90° CCW Remove all keys	440T-MMRSE20*xxx* (2)	440T-MMRSS20*xx* (2)
		2 N.O. and 2 N.C.	20 A		440T-MMRSE21*xxx* (2)	440T-MMRSS21*xxx* (2)
		4 N.O.	32 A		440T-MMRSE22*xxx* (2)	440T-MMRSS22*xxx* (2)
		4 N.O.	63 A		440T-MMRSE23*xxx* (2)	440T-MMRSS23*xxx* (2)
Quad key isolator (1)	4 keys out	4 N.O.	20 A	All keys are trapped (order separately) Rotate the isolator key 90° CCW to the off position Rotate the second, third, and fourth keys in sequence 90° CCW Remove all keys	440T-MMRSE30*xxxx* (2)	440T-MMRSS30*xxxx* (2)
		2 N.O. and 2 N.C.	20 A		440T-MMRSE31*xxxx* (2)	440T-MMRSS31*xxxx* (2)
		4 N.O.	32 A		440T-MMRSE32*xxxx* (2)	440T-MMRSS32*xxxx* (2)
		4 N.O.	63 A		440T-MMRSE33*xxxx* (2)	440T-MMRSS33*xxxx* (2)

(1) Isolator on first key out.
(2) Substitute the desired primary code for *x* (key not included). See Key Coding on page 124 for code selection.

Figure 129 - Multi-key Exchange Isolator Rotary Switch

Table 75 - Multi-key Exchange Isolator Rotary Switches

Type	No. of Keys	Contacts	Current	Trapped Key Condition	Cat. No.	
					Standard	Engraved
Dual key exchange isolator (1)	1 key in/ 1 key out	4 N.O.	20 A	Primary key 1 is free (order separately) Secondary key 1 is trapped (included w/ product) Insert the primary key 1 and rotate 90° CW Primary key 1 is now trapped Rotate the secondary key 1 90° CCW to turn the isolator to the off position Remove the secondary key	440T-MMRXE10*xy* (1) (2)	440T-MMRXS10*xy* (1) (2)
		2 N.O. and 2 N.C.	20 A		440T-MMRXE11*xy* (1) (2)	440T-MMRXS11*xy* (1) (2)
		4 N.O.	32 A		440T-MMRXE12*xy* (1) (2)	440T-MMRXS12*xy* (1) (2)
		4 N.O.	63 A		440T-MMRXE13*xy* (1) (2)	440T-MMRXS13*xy* (1) (2)
Triple key exchange isolator (1)	1 key in/ 2 keys out	4 N.O.	20 A	Primary key 1 is free (order separately) Secondary keys 1 and 2 are trapped (included w/ product) Insert the primary key 1 and rotate 90° CW Primary key 1 is now trapped Rotate secondary key 1 90° CCW to turn isolator to the off position Remove secondary keys 1 and 2	440T-MMRXE20*xyy* (1) (2)	440T-MMRXS20*xyy* (1) (2)
		2 N.O. and 2 N.C.	20 A		440T-MMRXE21*xyy* (1) (2)	440T-MMRXS21*xyy* (1) (2)
		4 N.O.	32 A		440T-MMRXE22*xyy* (1) (2)	440T-MMRXS22*xyy* (1) (2)
		4 N.O.	63 A		440T-MMRXE23*xyy* (1) (2)	440T-MMRXS23*xyy* (1) (2)
Quad key exchange isolator (1)	1 key in/ 3 keys out	4 N.O.	20 A	Primary key 1 is free (order separately) Secondary keys 1, 2, and 3 are trapped (included w/ product) Insert primary key 1 and rotate 90° CW Primary key 1 is now trapped Rotate the secondary key 1 90° CCW to operate the isolator and remove Remove secondary keys 1, 2, and 3	440T-MMRXE30*xyyy* (1) (2)	440T-MMRXS30*xyyy* (1) (2)
		2 N.O. and 2 N.C.	20 A		440T-MMRXE31*xyyy* (1) (2)	440T-MMRXS31*xyyy* (1) (2)
		4 N.O.	32 A		440T-MMRXE32*xyyy* (1) (2)	440T-MMRXS32*xyyy* (1) (2)
		4 N.O.	63 A		440T-MMRXE33*xyyy* (1) (2)	440T-MMRXS33*xyyy* (1) (2)

(1) Substitute the desired primary code for *x* (key not included). See Key Coding on page 124 for code selection.
(2) Substitute the desired secondary code for *y* (key included). See Key Coding on page 124 for code selection.

Description	Additional Information	Cat. No.
Stainless-steel key	See Accessories on page 166.	440T-AKEYE10x (1)
Stainless-steel replacement code barrel for products other than 100 A RPS/RKS units		440T-ASCBE14x (1)
Stainless-steel replacement code barrel for 100 A unit rotary switch		440T-ASCBE11x (1)
Stainless-steel weatherproof replacement dust cap		440T-ASFC10x (1)
Cable grip, M20 conduit, accommodates cable diameter 7...10.5 mm (0.27...0.41 in.)	–	440A-A09028
Adapter, conduit, M20 to 1/2 inch NPT, plastic		440A-A09042
Supplemental contact block, 20 A, 1 N.O. late make, early break 1 N.C. auxiliary	For use with RPSE12, RPSE20 (1 per switch, max)	440T-AACA10
Supplemental contact block, 20 A, 2 N.O. late make, early break	For use with RPSE12, RPSE20 (1 per switch, max)	440T-AACA11
Supplemental contact block, 20 A, 1 N.O., 1 N.C.	For use with RPSE13 and 14	440T-AACA20
Supplemental contact block, 20 A, 2 N.O.	For use with RPSE13 and 14	440T-AACA21

(1) Substitute the desired primary code for *x* (key not included). See Key Coding on page 124 for code selection.

Approximate Dimensions

Figure 130 - MRSE10 [mm (in.)]

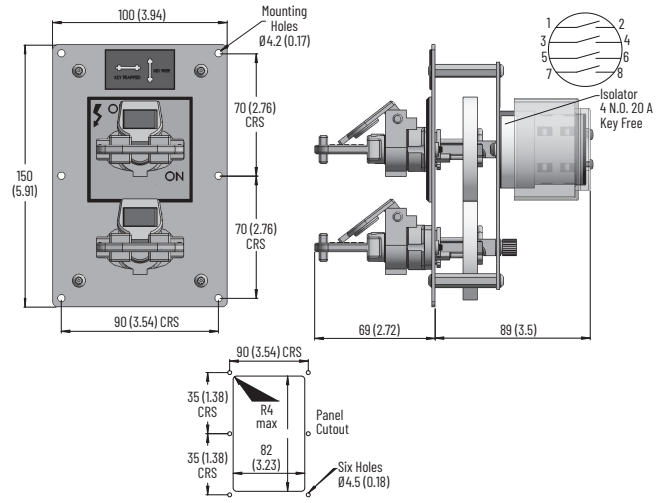

Figure 131 - MRSE20 [mm (in.)]

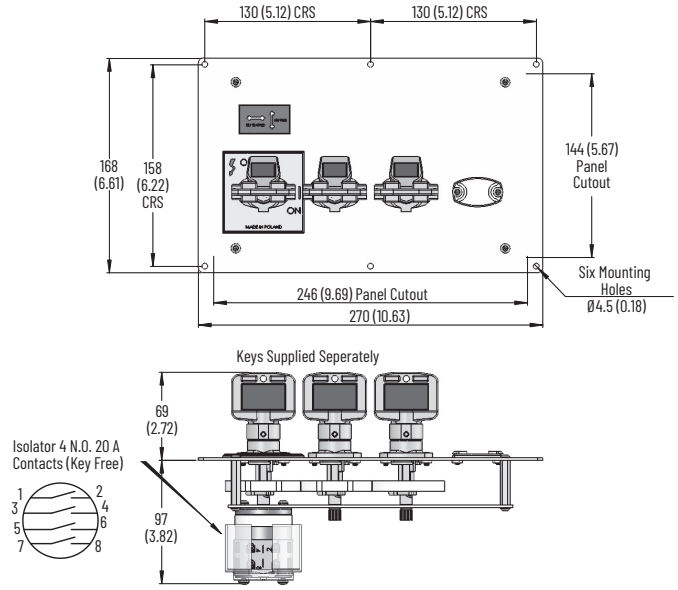

Figure 132 - MRXE10 and MRXE11 [mm (in.)]

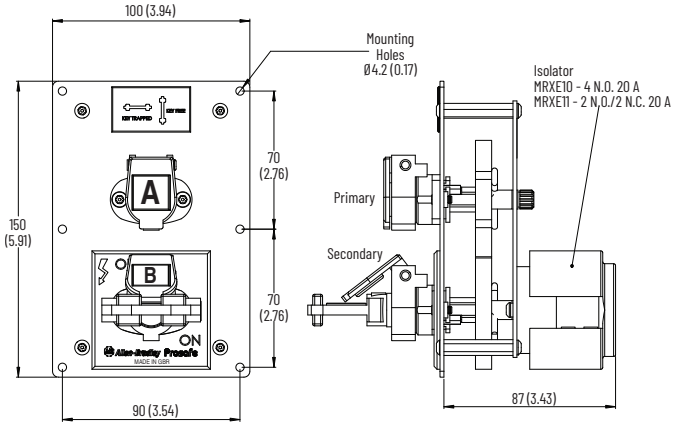

Figure 133 - MRXE30 [mm (in.)]

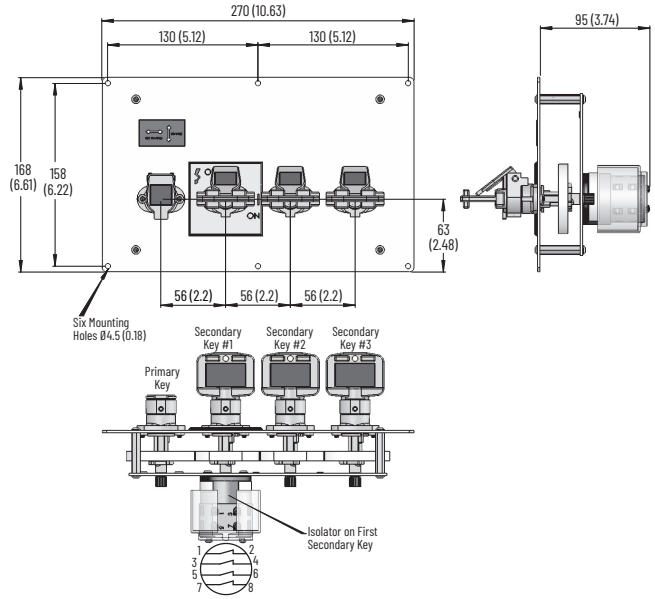

Figure 134 - RKSE10 and RKSE11 [mm (in.)]

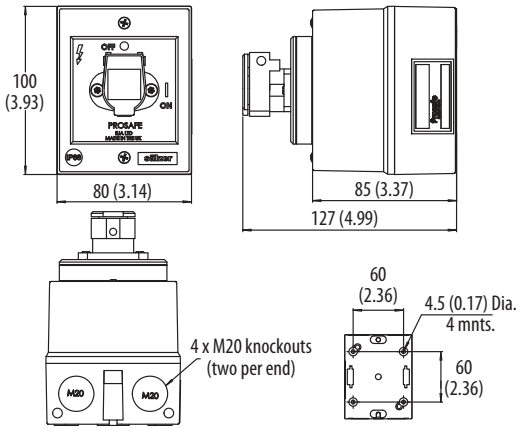

Figure 135 - RKSE12 and RKSE13 [mm (in.)]

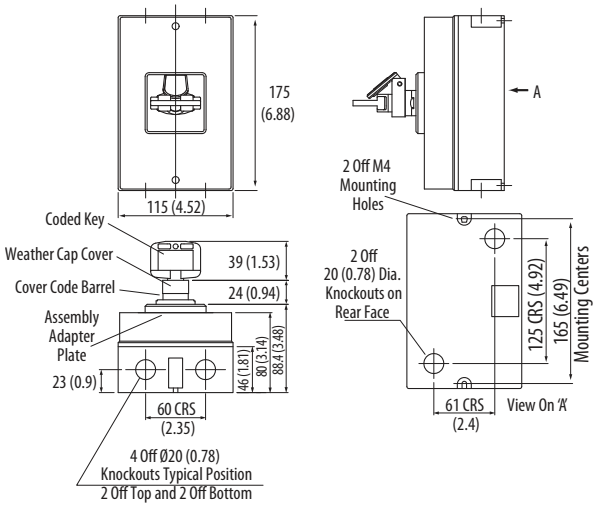

Figure 136 - RKSE14 [mm (in.)]

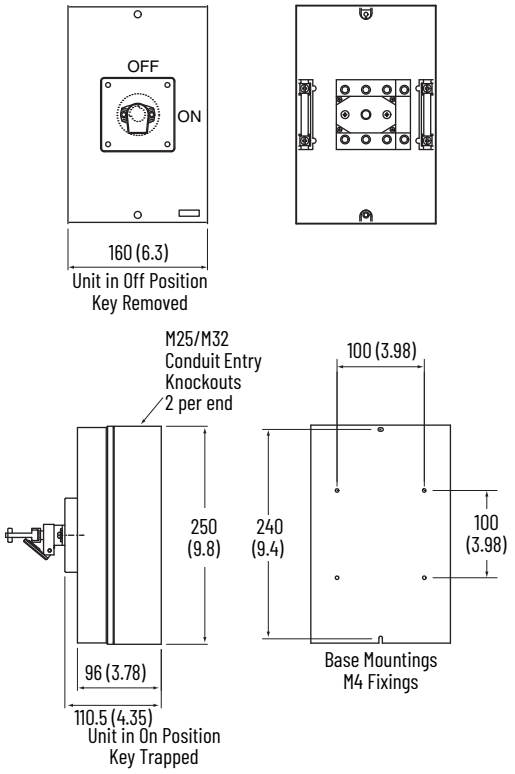

Figure 137 - RPSE10 and RPSE11 [mm (in.)]

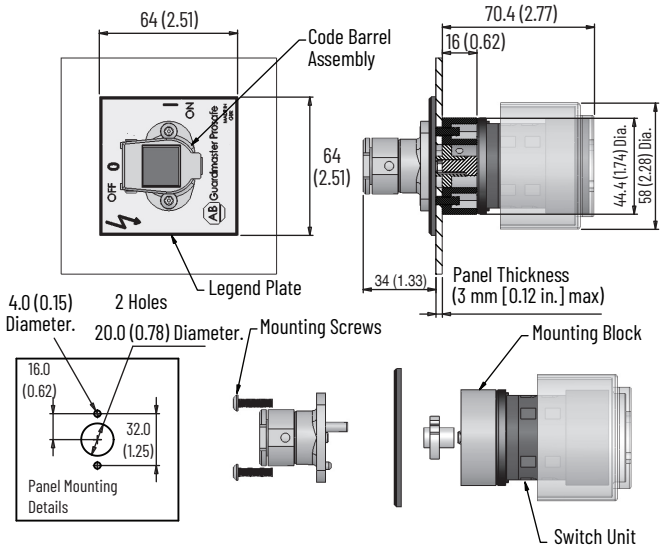

Figure 138 - RPSE12, 13, 14, and 20 [mm (in.)]

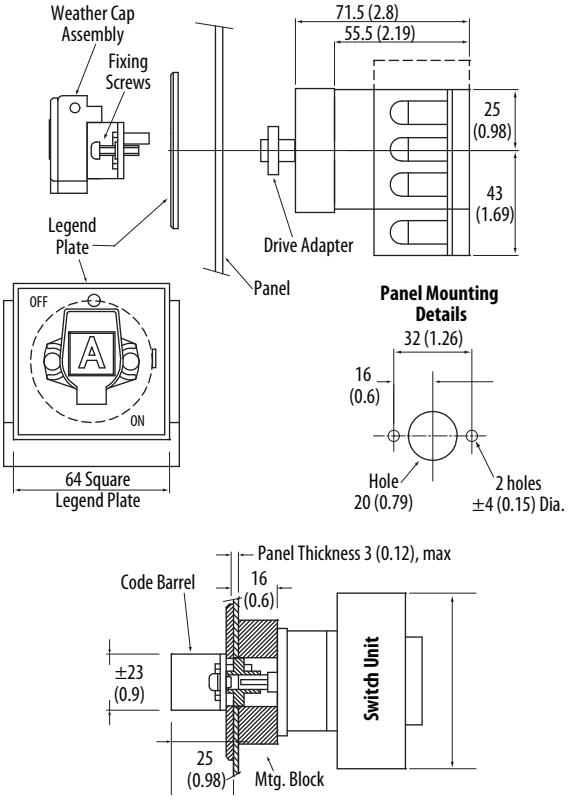

Figure 139 - RPSE16 [mm (in.)]

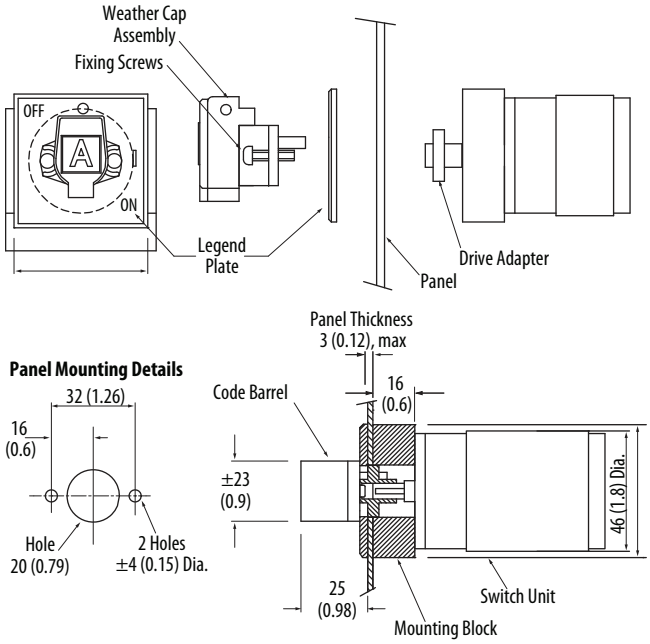

Figure 140 - Multi Key [mm (in.)]

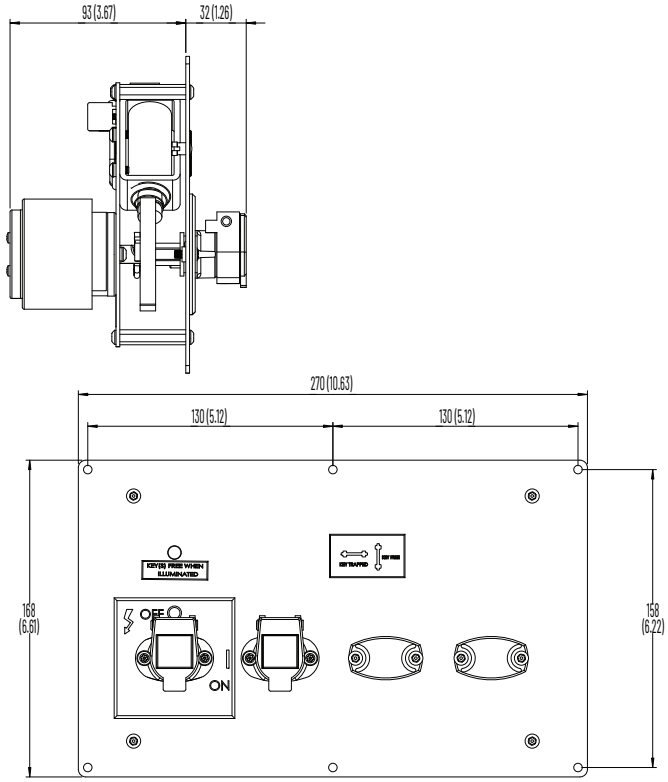

Switch Operation

Figure 141 - Dual Key (Two Keys Out)

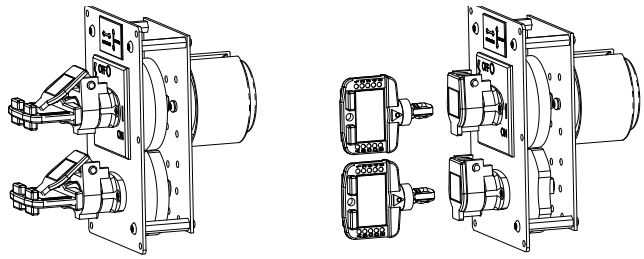

Figure 142 - Dual Key (One Key In/One Key Out)

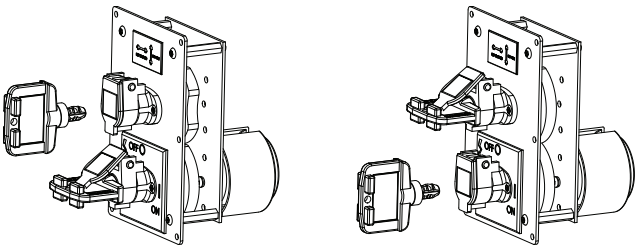

Figure 143 - Multi-key (Four Keys Out)

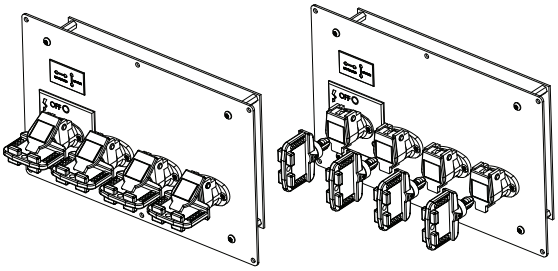

Figure 144 - Multi-key (One Key In/Two Keys Out)

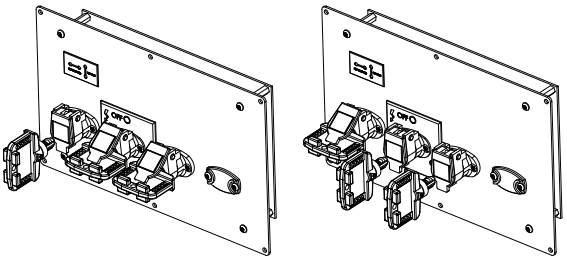

Typical Wiring Diagrams

Figure 145 - Diagrams Shown with Key Free

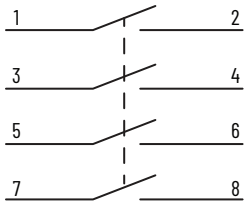

RKSE12 and RPSE12
RKSE13 and RPSE13
RPSE20

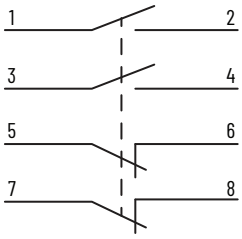

RKSE11 and RPSE11

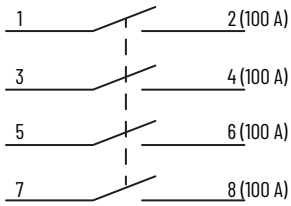

RKSE14 and RPSE14

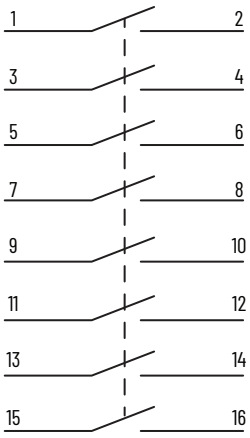

RPSE16

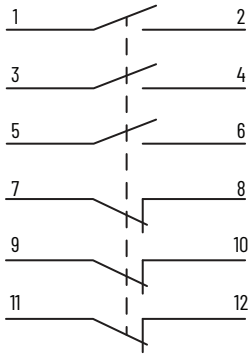

MPSE18

Solenoid Release Units

The trapped key solenoid release units have the following features:

- Direct-drive operation—positively opens contacts
- Integral solenoid monitoring
- Key trapped until release signal is applied
- Green key free status indicator
- 316L stainless-steel construction
- 24V DC, 110V DC, 110V AC, or 230V AC solenoid options
- Weatherproof stainless-steel dust cap as standard
- UL and CSA approval on switches
- Single or multiple key units available (contact your local Allen-Bradley distributor or Rockwell Automation sales office)
- Replaceable code barrel assembly

Specifications

Attribute	Solenoid Release Units
Standards Classification (Safety)	EN ISO 14119 and GS-ET-31, and can be used in safety application up to category 3, PLd in accordance with EN ISO 13849-1, and in the application area of EN 60204-1.
Functional Safety Data	PFHD = 1.00E-7 (probability of dangerous failure per hr); T1 = 20 (Proof test interval)
Certifications	CE Marked for all applicable directive, UKCA Marked for all applicable regulations, TÜV Certified rok.auto/certifications
Solenoid rating	24V DC (11 W), 110V DC (11 W), 110V AC (17VA), and 230V AC (17VA)
Solenoid power	• DC Types: 6.5 W continuous • AC Types: 6V A continuous
Electrical characteristics	See Specifications on page 126.
Mounting	Any position
Shear force to key, max	15.1 kN (3394.62 lbf)
Torque to key, max [N•m (lb•in)]	14 (10.33)
Cable type	0.75 mm^2 (18 AWG) 2-wire PVC jacket QD
Operating temperature [°C (°F)]	0...40 (32...104)
Relative humidity	95%
Material	• Trapped key components: 316L stainless steel • Faceplate: 316L stainless steel • Optional box: ABS plastic or stainless steel
Mechanical life	200,000 operations

Product Selection

Type	Solenoid Voltage	Contacts	Trapped Key Condition	Current	Cat. No.	
					Standard	Engraved
Single key out	24V DC	2 N.O. and 2 N.C.	Primary key is trapped (ordered separately) Key 1 operates the isolator, and is trapped by the solenoid in the ON position. When the solenoid is powered, key 1 can be turned 90 CCW, the isolator is now locked in the OFF position Key 1 is now free	20 A	440T-MSRUE11*x* (1)	440T-MSRUS11*x* (1)
		4 N.O.			440T-MSRUE10*x* (1)	440T-MSRUS10*x* (1)
				32 A	440T-MSRUE12*x* (1)	440T-MSRUS12*x* (1)
	110V AC	2 N.O. and 2 N.C.		20 A	440T-MSRUE22*x* (1)	440T-MSRUS22*x* (1)
		4 N.O.			440T-MSRUE20*x* (1)	440T-MSRUS20*x* (1)
				32 A	440T-MSRUE23*x* (1)	440T-MSRUS23*x* (1)
	230V AC	2 N.O. and 2 N.C.		20 A	440T-MSRUE33*x* (1)	440T-MSRUS33*x* (1)
		4 N.O.			440T-MSRUE30*x* (1)	440T-MSRUS30*x* (1)
				32 A	440T-MSRUE34*x* (1)	440T-MSRUS34*x* (1)
	110V DC	2 N.O. and 2 N.C.		20 A	440T-MSRUE44*x* (1)	440T-MSRUS44*x* (1)
		4 N.O.			440T-MSRUE40*x* (1)	440T-MSRUS40*x* (1)
		3 N.O. and 3N.C.			440T-MSRUE46*x* (1)	440T-MSRUS46*x* (1)
Dual key out	24V DC	4 N.O.	Primary keys are trapped (ordered separately) Key 1 operates the isolator, and is locked by the 24V DC Solenoid in the ON position. When the solenoid is powered, key 1 can be turned 90 CCW, the isolator is now locked in the OFF position Depending on the version, keys 2,3, and 4 can now turned 90 CCW in sequence, and all keys removed Keys are now free	20 A	440T-MS2097D*xx* (1)	-
		2 N.O. and 2 N.C.			440T-MS2097A*xx* (1)	-
		4 N.O.		32 A	440T-MS2097G*xx* (1)	-
				63 A	440T MS2097J*xx* (1)	-
Triple key out		4 N.O.		20 A	440T-MS3417D*xxx* (1)	-
		2 N.O. and 2 N.C.			440T-MS3417A*xxx* (1)	-
		4 N.O.		32 A	440T-MS3417G*xxx* (1)	-
				63 A	440T-MS3417J*xxx* (1)	-
Quad key out		4 N.O.		20 A	440T-MS3418D*xxxx* (1)	-
		2 N.O. and 2 N.C.			440T MS3418A*xxxx* (1)	-
		4 N.O.		32 A	440T-MS3418G*xxxx* (1)	-
				63 A	440T-MS3418J*xxxx* (1)	-

(1) Substitute the desired primary code for *x* (key not included). See Key Coding on page 124 for code selection.

Accessories

Description	Additional Information	Cat. No.
Stainless-steel key	See Accessories on page 166.	440T-AKEYE10*x* (1)
Stainless-steel replacement code barrel for products other than 100 A RPS/RKS units		440T-ASCBE14*x* (1)
Stainless-steel weatherproof replacement dust cap		440T-ASFC10*x* (1)
Optional IP65 plastic enclosure	For use with 20 A units	440T-AIPB10
Optional IP65 plastic enclosure	For use with 32 A units	440T-AIPB22

(1) Substitute the desired primary code for *x* (key not included). See Key Coding on page 124 for code selection.

Approximate Dimensions

Figure 146 - Single Key [mm (in.)]

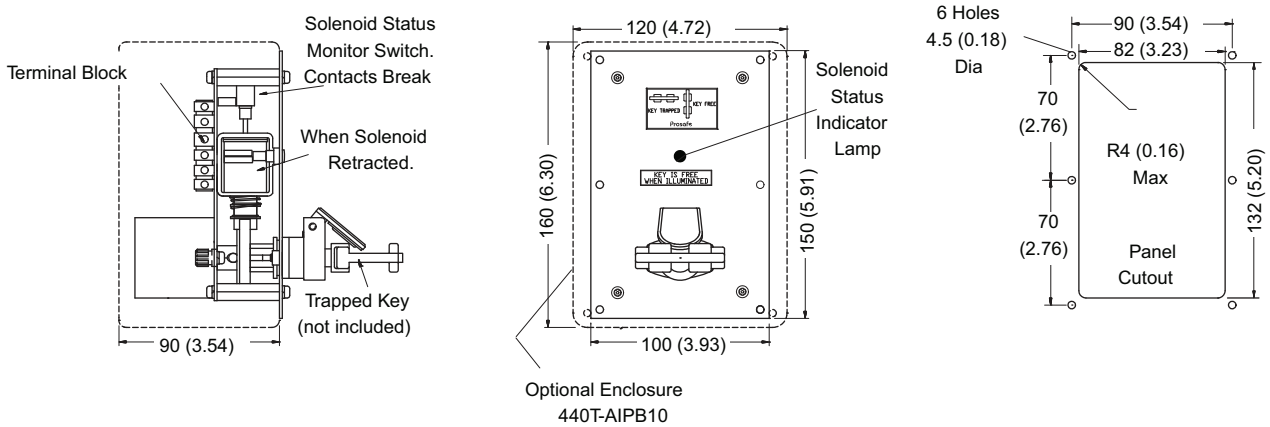

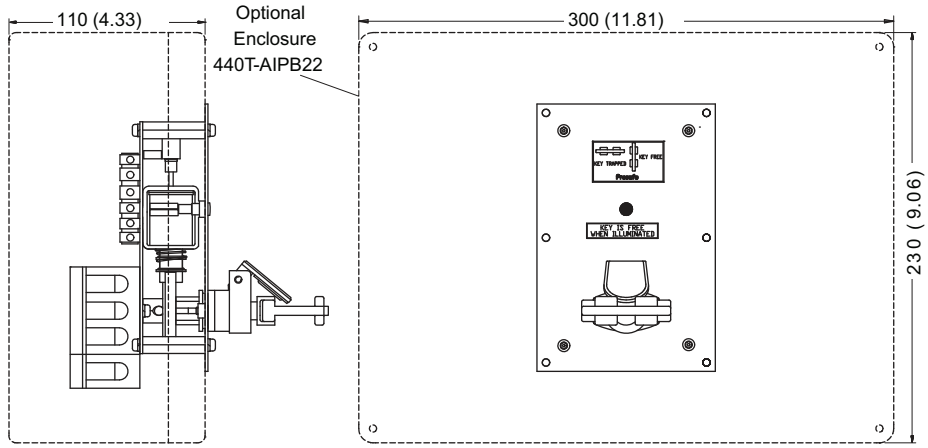

Figure 147 - Multi-key [mm (in.)]

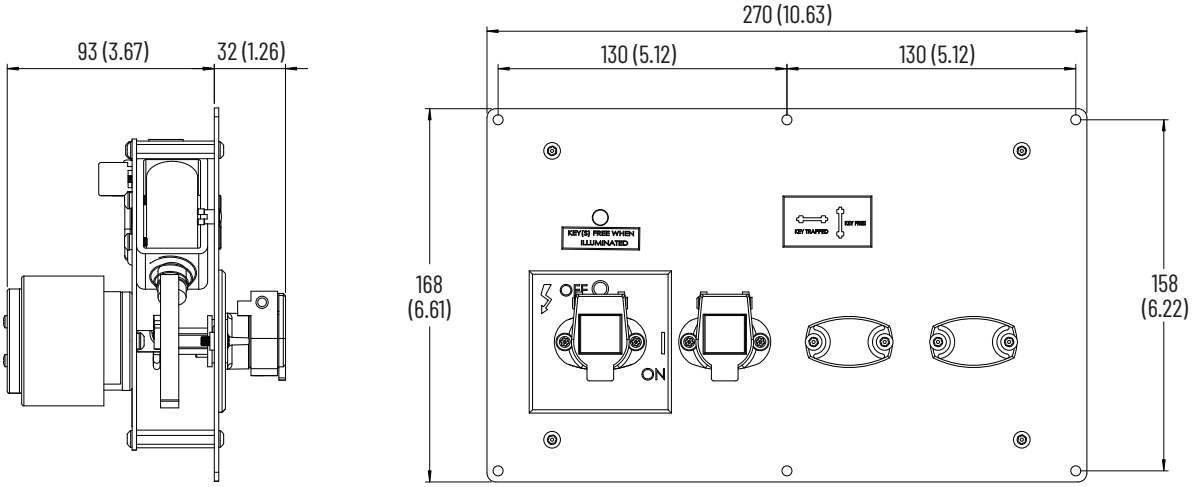

Typical Wiring Diagrams

Figure 148 - Solenoid Release Unit Wiring

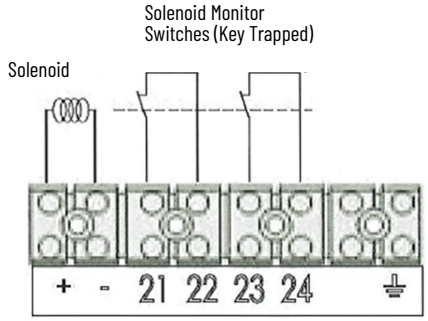

Figure 149 - Contacts

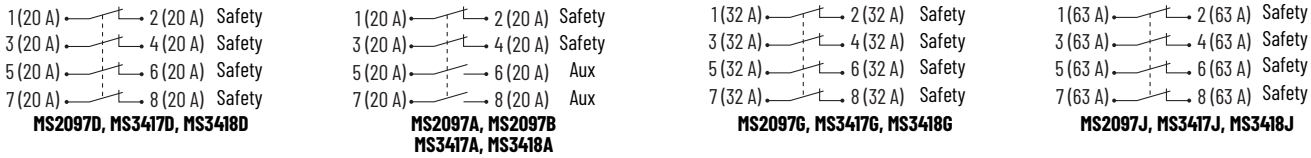

Electronic Timed-delay Units

The trapped keyswitch with electronic timed-delay units have the following features:

- Timed-delay output up to 30 minutes
- Single key or dual key
- 316L stainless-steel keys
- Category 1 Stop
- Replaceable code barrel assembly

Specifications

Attribute	Electronic Timed-delay Units
Standards	IEC60204-1, IEC60947-5-1
Certifications	CE Marked for all applicable EU directives, UKCA Marked for all applicable regulations rok.auto/certifications
Solenoid voltage	24V DC, 110V AC, 230V AC
Shear force to key, max	15.1 kN (3394.62 lbf)
Torque to key, max [N•m (lb•in)]	14 (10.33)
Operating temperature [°C (°F)]	0...40 (32...104)
Relative humidity	95%
Material	• Trapped key components: 316L stainless steel • Faceplate: 316L stainless steel
Mounting	Tamper resistant screws
Mechanical life	200,000 operations
Time delay	0.1 second...30 minutes

Product Selection

Type	Solenoid Voltage	Contact Set 1	Contact Set 2	Cat. No. (1)
Single key out panel mounted	24V DC	3 N.O. 40 A	1 N.O. 20 A	440T-MSTUE10*x* (2)
		2 N.O. 20 A	1 N.O. 20 A	440T-MSTUE11*x* (2)
	110V AC	3 N.O. 40 A	1 N.O. 20 A	440T-MSTUE20*x* (2)
		2 N.O. 20 A	1 N.O. 20 A	440T-MSTUE22*x* (2)
	230V AC	3 N.O. 40 A	1 N.O. 20 A	440T-MDTUE30*x* (2)
		2 N.O. 20 A	1 N.O. 20 A	440T-MSTUE33*x* (2)
Dual key out panel mounted	24V DC	3 N.O. 40 A	1 N.O. 20 A	440T-MDTUE10*xx* (2)
		2 N.O. 20 A	1 N.O. 20 A	440T-MDTUE11*xx* (2)
	110V AC	3 N.O. 40 A	1 N.O. 20 A	440T-MDTUE20*xx* (2)
		2 N.O. 20 A	1 N.O. 20 A	440T-MDTUE22*xx* (2)
	230V AC	3 N.O. 40 A	1 N.O. 20 A	440T-MDTUE30*xx* (2)
		2 N.O. 20 A	1 N.O. 20 A	440T-MDTUE33*xx* (2)

(1) See Prosafe Electronic Time Delay Unit Installation Instructions, publication 440T-IN016 for safety relay connection and switch setting details.
(2) Substitute the desired primary code for *x* (key not included). See Key Coding on page 124 for code selection.

Accessories

Description	Additional Information	Cat. No.
Stainless-steel key	See Accessories on page 166.	440T-AKEYE10*x* (1)
Stainless-steel replacement code barrel for products other than 100 A RPS/RKS units		440T-ASCBE14*x* (1)
Stainless-steel weatherproof replacement dust cap		440T-ASFC10*x* (1)

(1) Substitute the desired primary code for *x* (key not included). See Key Coding on page 124 for code selection.

Typical Wiring Diagram

Figure 150 - Wiring (Shown with Power On)

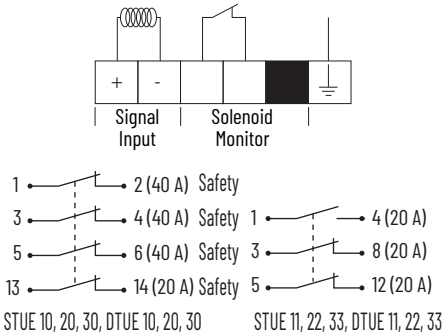

Approximate Dimensions

Figure 151 - Timed-delay Unit Dimensions [mm (in.)]

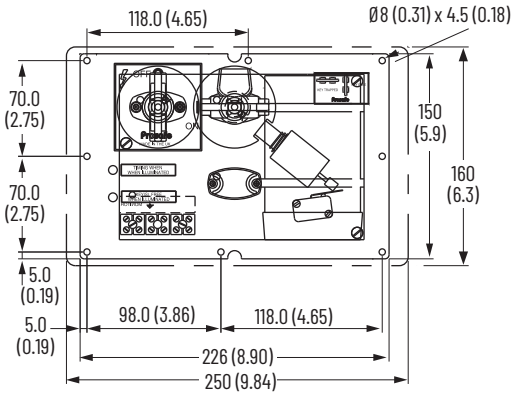

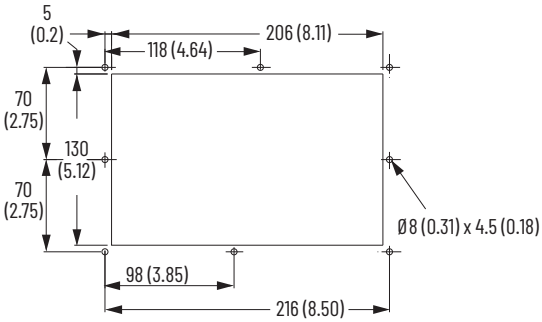

Cutout Dimensions

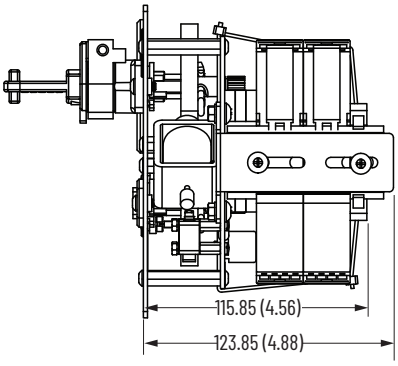

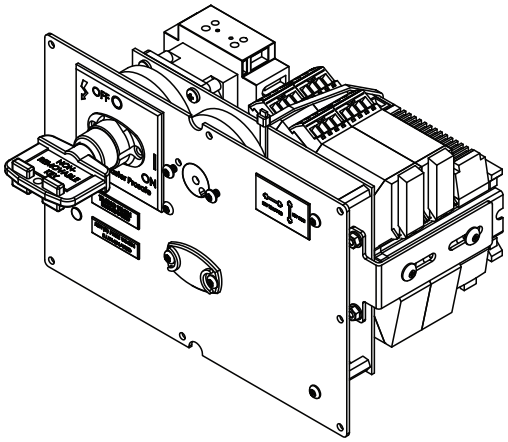

Key Exchange Units

The trapped key interlock exchange unit switches have the following features:

- A range of standard units in various combinations
- 316L stainless-steel construction
- Primary keys in release secondary keys simultaneously on units up to six ways
- Weatherproof stainless-steel dust cap as standard
- Replaceable code barrel assembly

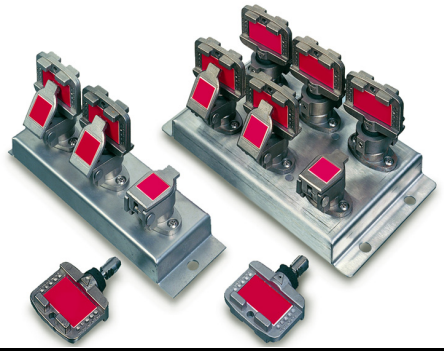

Specifications

Attribute	Key Exchange Units
Standards Classification (Safety)	EN ISO 14119 and GS-ET-31, and can be used in safety application up to category 3, PLd in accordance with EN ISO 13849-1, and in the application area of EN 60204-1.
Functional Safety Data	PFHD = 1.00E-7 (probability of dangerous failure per hr); T1 = 20 (Proof test interval)
Certifications	CE Marked for all applicable EU directives, UKCA Marked for all applicable regulations, TÜV Certified rok.auto/certifications
Operating temperature [°C (°F)]	-40...+80 (-40...+176)
Relative humidity	95%
Mechanical life	200,000 operations
Shear force to key, max	15.1 kN (3394.62 lbf)
Torque to key, max [N•m (lb•in)]	14 (10.33)
Material	316L stainless steel

Optional Key Exchange Cabinets

Type	Number of Keys	Length [mm (in)]	Width [mm (in)]	Depth [mm (in)]	Cat. No.
Painted mild steel	7...11 way (max)	400 (15.7)	300 (11.8)	200 (7.87)	440T-AIPB30
	12...15 way (max)	400 (15.7)	400 (15.7)	210 (8.26)	440T-AIPB33
	16...25 way (max)	600 (23.6)	600 (23.6)	210 (8.26)	440T-AIPB34
Stainless steel	12...15 way (max)	400 (15.7)	400 (15.7)	210 (8.26)	440T-AIPB40
	16...25 way (max)	600 (23.6)	600 (23.6)	210 (8.26)	440T-AIPB44

Product Selection

Number of Keys	Keys In and Out	Cat. No. (1)
2 way	1 key in 1 key out	440T-MKEXE10
3 way	1 key in 2 key out	440T-MKEXE11
4 way	1 key in 3 key out	440T-MKEXE12
5 way	1 key in 4 key out	440T-MKEXE13
6 way	1 key in 5 key out	440T-MKEXE14
4 way	2 key in 2 key out	440T-MKEXE15
5 way	2 key in 3 key out	440T-MKEXE16
6 way	2 key in 4 key out	440T-MKEXE17
6 way	3 key in 3 key out	440T-MKEXE18
7 way	1 key in 6 key out	440T-MKEXE19
8 way	1 key in 7 key out	440T-MKEXE20
9 way	1 key in 8 key out	440T-MKEXE22
10 way	1 key in 9 key out	440T-MKEXE23
11 way	1 key in 10 key out	440T-MKEXE24
12 way	1 key in 11 key out	440T-MKEXE25

Number of Keys	Keys In and Out	Cat. No. (1)
13 way	1 key in 12 key out	440T-MKEXE26
14 way	1 key in 13 key out	440T-MKEXE27
15 way	1 key in 14 key out	440T-MKEXE28
16 way	1 key in 15 key out	440T-MKEXE29
17 way	1 key in 16 key out	440T-MKEXE30
18 way	1 key in 17 key out	440T-MKEXE33
19 way	1 key in 18 key out	440T-MKEXE34
20 way	1 key in 19 key out	440T-MKEXE35
21 way	1 key in 20 key out	440T-MKEXE36
22 way	1 key in 21 key out	440T-MKEXE37
23 way	1 key in 22 key out	440T-MKEXE38
24 way	1 key in 23 key out	440T-MKEXE39
25 way	1 key in 24 key out	440T-MKEXE40

(1) Specify the codes individually for each primary key-in (key not included) and for each secondary key (included). See Key Coding on page 124 for code selection.

Accessories

Description	Additional Information	Cat. No.
Stainless-steel key	See Accessories on page 166.	440T-AKEYE10x [1]
Stainless-steel replacement code barrel for products other than 100 A RPS/RKS units		440T-ASCBE14x [1]
Stainless-steel weatherproof replacement dust cap		440T-ASFC10x [1]

(1) Substitute the desired primary code for *x* (key not included). See Key Coding on page 124 for code selection.

Approximate Dimensions

Figure 152 - 2- or 3-way Key Exchange Unit [mm (in.)]

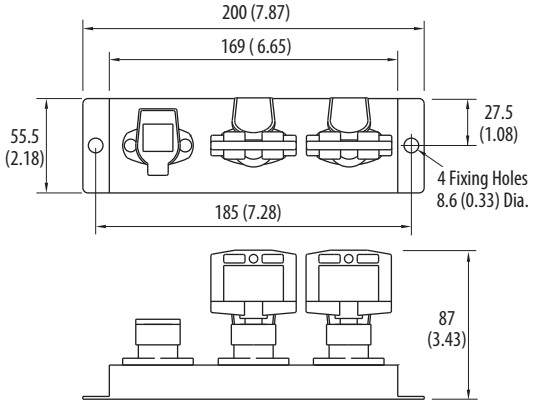

Figure 153 - 4-, 5-, or 6-way Key Exchange Unit [mm (in.)]

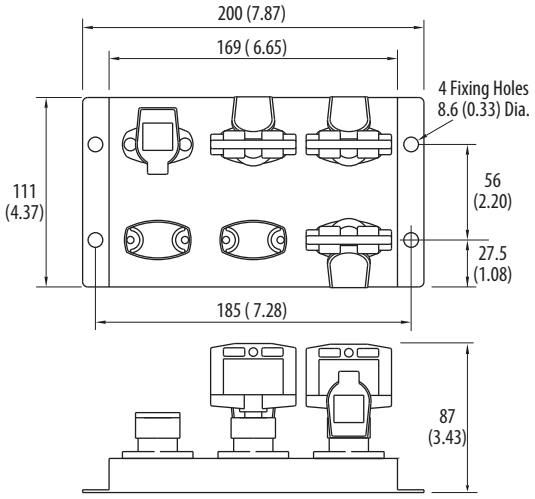

Figure 154 - 7-...11-way Units [mm (in.)]

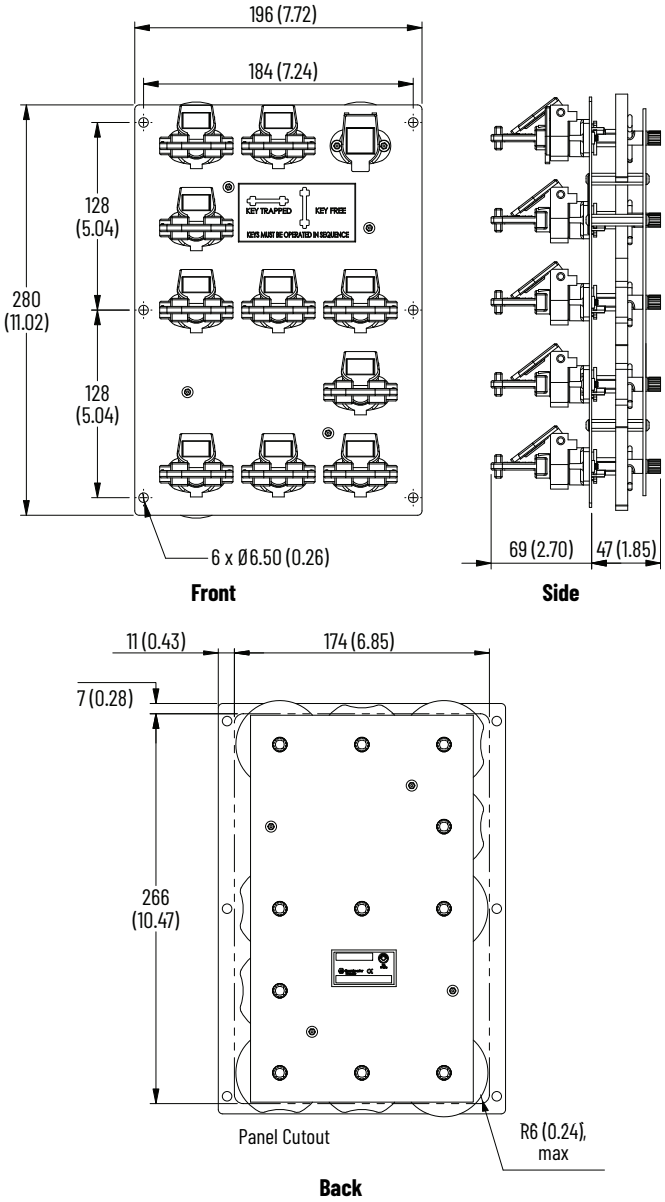

Figure 155 - 12-...15-way Units [mm (in.)]

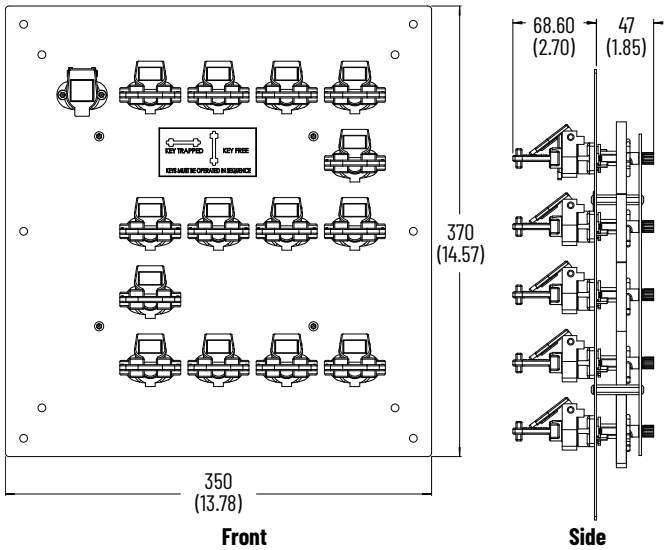

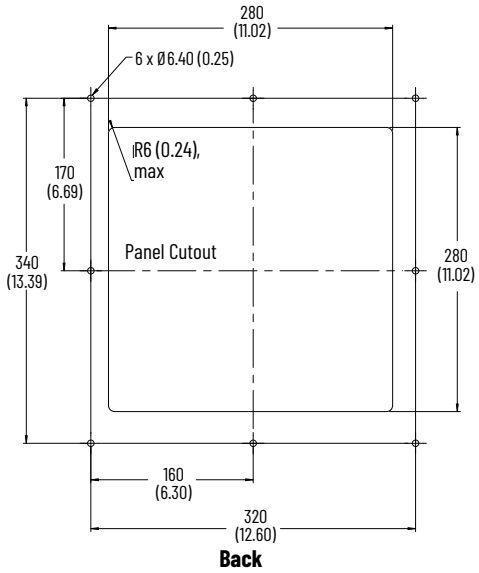

Figure 156 - 16-...25-way Units [mm (in.)]

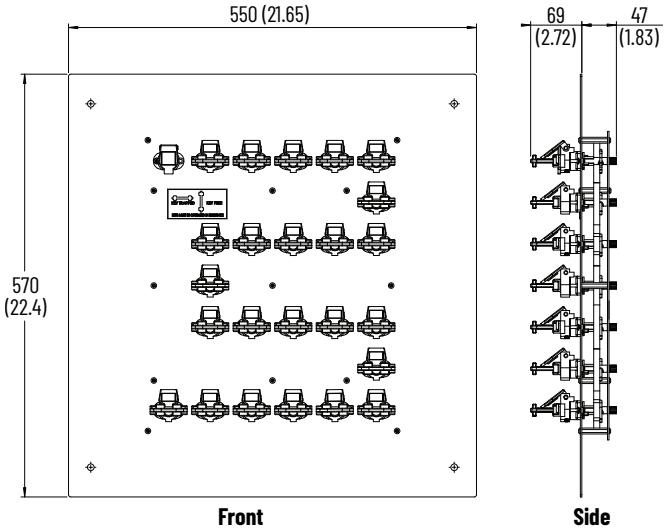

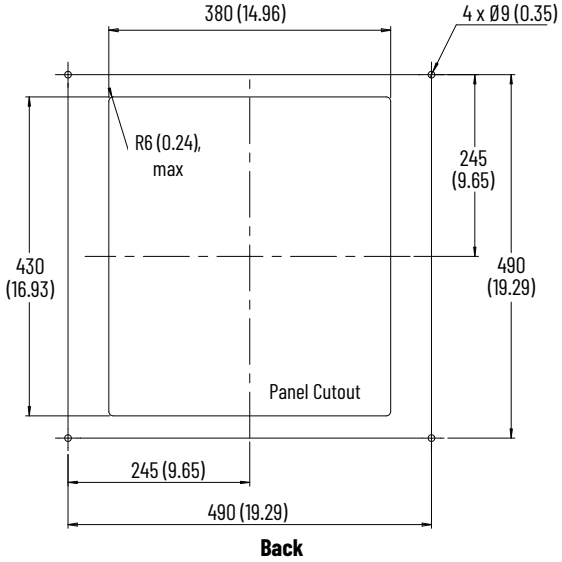

Figure 157 - Key Exchange Cabinets (Painted Mild Steel or Stainless Steel)

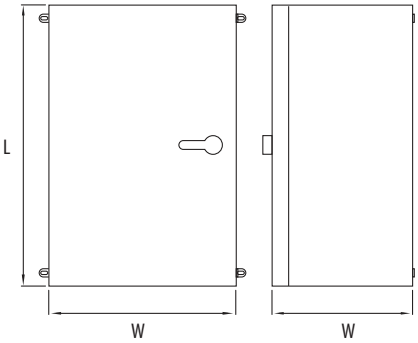

Bolt Interlocks

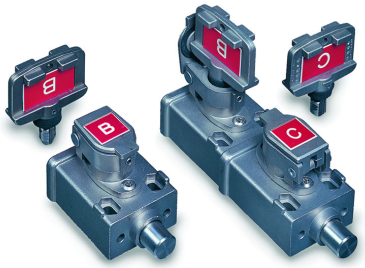

The trapped key bolt interlock switches have the following features:

- 316L stainless-steel construction
- Single or dual key units
- Various extensions of bolt
- Direct-drive push/pull operation
- Replaceable code barrel assembly
- Fitted with tamper resistant screws
- Weatherproof stainless-steel dust cap as standard

Specifications

Table 76 - Mechanical Bolt Interlock Specifications

Attribute	Value
Standards Classification (Safety)	EN ISO 14119 and GS-ET-31, and can be used in safety application up to category 3, PLd in accordance with EN ISO 13849-1, and in the application area of EN 60204-1.
Functional Safety Data	PFHD = 1.00E-7 (probability of dangerous failure per hr); T1 = 20 (Proof test interval)
Certifications	CE Marked for all applicable EU directives, UKCA Marked for all applicable regulations, TÜV Certified rok.auto/certifications
Operating temperature [°C (°F)]	-40...+80 (-40...+176)
Relative humidity	95%
Mechanical life	200,000 operations
Shear force to key, max	15.1 kN (3394.62 lbf)
Torque to key, max [N•m (lb•in)]	14 (10.33)
Material	Faceplate: 316L stainless steel
Mounting	SBL • 2 x M5 counter-bored from top • 2 x M5 from underside with M5 nuts DBL • 4 x M5 counter-bored from top • 4 x M5 from underside with M5 nuts
Bolt diameter [mm (in.)]	15 (0.59)

Table 77 - Electrical/Solenoid Bolt Interlock Specifications

Attribute	Value
Standards Classification (Safety)	EN ISO 14119 and GS-ET-31, and can be used in safety application up to category 3, PLd in accordance with EN ISO 13849-1, and in the application area of EN 60204-1.
Functional Safety Data	PFHD = 1.00E-7 (probability of dangerous failure per hr); T1 = 20 (Proof test interval)
Certifications	CE Marked for all applicable EU directives, UKCA Marked for all applicable regulations, TÜV Certified rok.auto/certifications
Safety contacts	2 N.C. positive break
Designation/utilization category	A300/AC-15 (Ue/Ie) 240V/3 A, 120V/6 A N300/DC-13 (Ue/Ie) 250V/1.1 A, 125V/2.2 A
Thermal current	10 A
Current, min	5V 5 mA DC
Auxiliary contacts	1 N.O.
Ingress protection rating	IP67
Shear force to key, max	15.1 kN (3394.62 lbf)
Torque to key, max [N•m (lb•in)]	14 (10.33)
Operating temperature [°C (°F)]	-40...+80 (-40...+176)
Mechanical life	200,000 operations
Electrical life	Dependent on load
Torque settings, max [N•m (lb•in)]	• Lid screws: 0.55 (4.87) • Terminal screws: 1.0 (8.85)

Operation

Figure 158 - Single Key

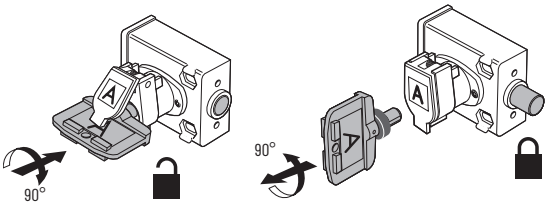

Figure 159 - Dual Key

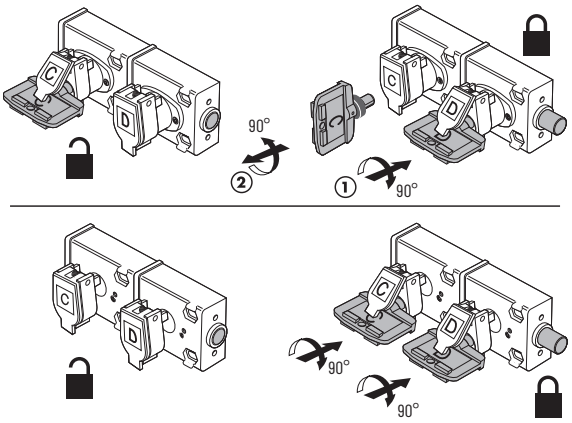

Figure 160 - Triple Key

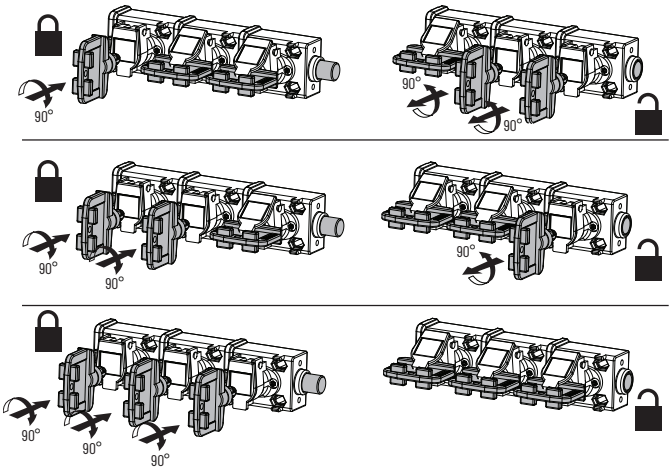

Figure 161 - Quad Key

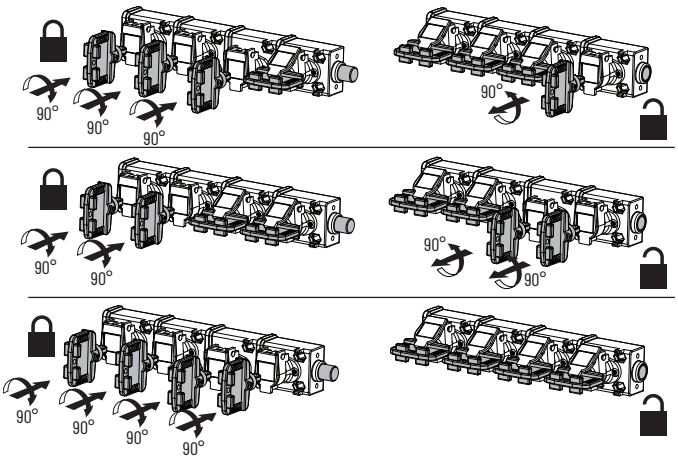

Product Selection

Table 78 - Mechanical Bolt Interlock Product Selection

Type	Keys In / Out	Trapped Key Condition	Bolt Retracted [mm (in.)]	Bolt Extended [mm (in.)]	Cat. No.	
					Standard	Engraved
Single key	1 key in	Bolt projected (guard is secured) Primary key 1 is free (ordered separately) Insert primary key 1 and rotate 90° CW to retract bolt Primary key 1 is now trapped (guard can be accessed)	0	14 (0.55)	440T-MSBLE10*x* (1)	440T-MSBLS10*x* (1)
			3 (0.11)	17 (0.66)	440T-MSBLE11*x* (1)	440T-MSBLS11*x* (1)
			6 (0.23)	20 (0.78)	440T-MSBLE12*x* (1)	440T-MSBLS12*x* (1)
			13 (0.51)	27 (1.06)	440T-MSBLE13*x* (1)	440T-MSBLS13*x* (1)
		Bolt projected (guard is secured) Primary key 1 is free (ordered separately) Insert primary key 1 and rotate 90° CW to extend bolt Primary key 1 is now trapped (guard is secure)	0	14 (0.55)	440T-MSBLE33*x* (1)	440T-MSBLS33*x* (1)
			3 (0.11)	17 (0.66)	440T-MSBLE34*x* (1)	440T-MSBLS34*x* (1)
			6 (0.23)	20 (0.78)	440T-MSBLE35*x* (1)	440T-MSBLS35*x* (1)
			13 (0.51)	27 (1.06)	440T-MSBLE36*x* (1)	440T-MSBLS36*x* (1)
Dual key	2 keys in	Bolt projected (guard is secured) Primary keys are free (ordered separately) Insert primary key 1 into the lock, then insert primary key 2 Rotate both keys 90° CW to retract bolt Primary keys are now trapped (guard can be accessed)	0	14 (0.55)	440T-MDBLE10*x* (1)	440T-MDBLS10*x* (1)
			3 (0.11)	17 (0.66)	440T-MDBLE11*x* (1)	440T-MDBLS11*x* (1)
			6 (0.23)	20 (0.78)	440T-MDBLE12*x* (1)	440T-MDBLS12*x* (1)
			13 (0.51)	27 (1.06)	440T-MDBLE13*x* (1)	440T-MDBLS13*x* (1)
	1 key in / 1 key out	Bolt projected (guard is secured) Primary key 1 free (ordered separately) Secondary key 1 trapped (included w/ product) Insert primary key 1 and rotate 90° CW Rotate secondary key 90° CCW to retract bolt Primary key 1 is now trapped (guard can be accessed) Secondary key 1 is free (personal key)	0	14 (0.55)	440T-MDBLE14*xy* (1) (2)	440T-MDBLS14*xy* (1)(2)
			3 (0.11)	17 (0.66)	440T-MDBLE15*xy* (1)(2)	440T-MDBLS15*xy* (1)(2)
			6 (0.23)	20 (0.78)	440T-MDBLE16*xy* (1)(2)	440T-MDBLS16*xy* (1)(2)
			13 (0.51)	27 (1.06)	440T-MDBLE17*xy* (1)(2)	440T-MDBLS17*xy* (1)(2)
	1 key in / 1 key out	Bolt projected (guard is secured) Primary key 1 free (ordered separately) Secondary key 1 trapped (included w/ product) Insert primary key 1 and rotate 90° CW Rotate secondary key 1 to 90° CCW to retract bolt Primary key 1 is now trapped (guard can be accessed) Secondary key 1 ejects free from the lock (personal key)	0	14 (0.55)	440T-MDBLJ14*xy* (1)(2)	440T-MDBLT14*xy* (1)(2)
			3 (0.11)	17 (0.66)	440T-MDBLJ15*xy* (1)(2)	440T-MDBLT15*xy* (1)(2)
			6 (0.23)	20 (0.78)	440T-MDBLJ16*xy* (1)(2)	440T-MDBLT16*xy* (1)(2)
			13 (0.51)	20 (0.78)	440T-MDBLJ17*xy* (1)(2)	440T-MDBLT17*xy* (1)(2)
Triple key	3 keys in	Bolt projected (guard is secured) Primary keys are free (ordered separately) Insert primary key 1 into the lock, then key 2, then key 3 Rotate the 3 primary keys 90° CW to retract the bolt Primary keys are now trapped (guard can be accessed)	0	14 (0.55)	440T-MTBLE10*xxx* (1)	440T-MTBLS10*xxx* (1)
			3 (0.11)	17 (0.66)	440T-MDBLE11*xxx* (1)	440T-MDBLS11*xxx* (1)
			6 (0.23)	20 (0.78)	440T-MTBLE12*xxx* (1)	440T-MTBLS12*xxx* (1)
			13 (0.51)	27 (1.06)	440T-MTBLE13*xxx* (1)	440T-MTBLS13*xxx* (1)
	2 keys in / 1 key out	Bolt projected (guard is secured) Primary key 1 and primary key 2 are free (ordered separately) Secondary key 1 is trapped Insert primary key 1 into the lock, then key 2 Rotate primary key 1 and key 2 to 90° CW Rotate secondary key 1 to 90° CCW to retract bolt Primary key 1 and key 2 are now trapped (guard can be accessed) Secondary key 1 is free (personal key)	0	14 (0.55)	440T-MTBLE14*xxy* (1)(2)	440T-MTBLS14*xxy* (1)(2)
			3 (0.11)	17 (0.66)	440T-MTBLE15*xxy* (1)(2)	440T-MTBLS15*xxy* (1)(2)
			6 (0.23)	20 (0.78)	440T-MTBLE16*xxy* (1)(2)	440T-MTBLS16*xxy* (1)(2)
			13 (0.51)	27 (1.06)	440T-MTBLE17*xxy* (1)(2)	440T-MTBLS17*xxy* (1)(2)
	1 key in / 2 key out	Bolt projected (guard is secured) Primary key 1 is free (ordered separately) Secondary key 1 and key 2 are trapped (included w/ product) Insert primary key 1 into the lock and rotate 90° CW Rotate secondary key 1 and key 2 to 90° CCW to retract bolt Primary key 1 is now trapped (guard can be accessed) Secondary key 1 and key 2 are free (personal keys)	0	14 (0.55)	440T-MTBLE18*xyy* (1)(2)	440T-MTBLS18*xyy* (1)(2)
			3 (0.11)	17 (0.66)	440T-MTBLE19*xyy* (1)(2)	440T-MTBLS19*xyy* (1)(2)
			6 (0.23)	20 (0.78)	440T-MTBLE20*xyy* (1)(2)	440T-MTBLS20*xyy* (1)(2)
			13 (0.51)	27 (1.06)	440T-MTBLE21*xyy* (1)(2)	440T-MTBLS21*xyy* (1)(2)

Table 78 - Mechanical Bolt Interlock Product Selection (Continued)

Type	Keys In / Out	Trapped Key Condition	Bolt Retracted [mm (in.)]	Bolt Extended [mm (in.)]	Cat. No.	
					Standard	Engraved
Quad key	4 keys in	Bolt projected (guard is secured) Primary keys are free (ordered separately) Insert primary key 1 into lock, then key 2, then key 3, then key 4 Rotate the 4 primary keys 90° CW to retract the bolt Primary keys are now trapped (guard can be accessed)	0	14 (0.55)	440T-MQBLE10*xxxx* (1)	440T-MQBLS10*xxxx* (1)
			3 (0.11)	17 (0.66)	440T-MQBLE11*xxxx* (1)	440T-MQBLS11*xxxx* (1)
			6 (0.23)	20 (0.78)	440T-MQBLE12*xxxx* (1)	440T-MQBLS12*xxxx* (1)
			13 (0.51)	27 (1.06)	440T-MQBLE13*xxxx* (1)	440T-MQBLS13*xxxx* (1)
	3 keys in / 1 key out	Bolt projected (guard is secured) Primary keys are free (ordered separately) Secondary key 1 is trapped (included w/ product) Insert primary key 1 into the lock, then key 2, then key 3 Rotate the 3 primary keys 90° CW Rotate secondary key 1 to 90° CCW to retract the bolt Primary keys are now trapped (guard can be accessed) Secondary key 1 is free (personal key)	0	14 (0.55)	440T-MQBLE14*xxxy* (1)(2)	440T-MQBLS14*xxxy* (1)(2)
			3 (0.11)	17 (0.66)	440T-MQBLE15*xxxy* (1)(2)	440T-MQBLS15*xxxy* (1)(2)
			6 (0.23)	20 (0.78)	440T-MQBLE16*xxxy* (1)(2)	440T-MQBLS16*xxxy* (1)(2)
			13 (0.51)	27 (1.06)	440T-MQBLE17*xxxy* (1)(2)	440T-MQBLS17*xxxy* (1)(2)

(1) Substitute the desired primary code for *x* (key not included). See Key Coding on page 124 for code selection.
(2) Substitute the desired secondary code for *y* (key included). See Key Coding on page 124 for code selection.

Table 79 - Electrical Bolt Interlock Product Selection

Contact Type	Type	Keys In / Out	Trapped Key Condition	Bolt Retracted [mm (in.)]	Bolt Extended [mm (in.)]	Cat. No.	
						Standard	Engraved
2 N.C. and 1 N.O. break before make	Single key	1 key in	Bolt projected (guard is secured) Primary key 1 is free (ordered separately) 2 N.C. safety contacts are in the closed state 1 N.O. contact is in the open state Insert primary key 1 and rotate 90° CW to retract bolt 2 N.C. safety contacts are in the open state 1 N.O. contact in the closed state Primary key 1 is now trapped (guard can be accessed)	0	14 (0.55)	440T-MSBSE10*x* (1)	440T-MSBSS10*x* (1)
				3 (0.11)	17 (0.66)	440T-MSBSE11*x* (1)	440T-MSBSS11*x* (1)
				6 (0.23)	20 (0.78)	440T-MSBSE12*x* (1)	440T-MSBSS12*x* (1)
				13 (0.51)	27 (1.06)	440T-MSBSE13*x* (1)	440T-MSBSS13*x* (1)
			Bolt retracted (guard can be accessed) Primary key 1 is free (ordered separately) 2 N.C. safety contacts are in the open state 1 N.O. contact is in the closed state Insert primary key 1 and rotate 90° CCW to extend bolt 2 N.C. safety contacts are in the closed state 1 N.O. contact in the open state Key 1 is now trapped (guard is secured)	0	14 (0.55)	440T-MSBSE33*x* (1)	440T-MSBSS33*x* (1)
				3 (0.11)	17 (0.66)	440T-MSBSE34*x* (1)	440T-MSBSS34*x* (1)
				6 (0.23)	20 (0.78)	440T-MSBSE35*x* (1)	440T-MSBSS35*x* (1)
				13 (0.51)	27 (1.06)	440T-MSBSE36*x* (1)	440T-MSBSS36*x* (1)
	Dual key	2 keys in	Bolt projected (guard is secured) Primary keys are free (ordered separately) 2 N.C. safety contacts are in the closed state 1 N.O. contact is in the open state Insert primary key 1 into the lock then insert primary key 2 Rotate both keys, 90° CW to retract bolt 2 N.C. safety contacts are in the open state 1 N.O. contact in the closed state Primary keys are now trapped (guard can be accessed)	0	14 (0.55)	440T-MDBSE10*xx* (1)	440T-MDBSS10*xx* (1)
				3 (0.11)	17 (0.66)	440T-MDBSE11*xx* (1)	440T-MDBSS11*xx* (1)
				6 (0.23)	20 (0.78)	440T-MDBSE12*xx* (1)	440T-MDBSS12*xx* (1)
				13 (0.51)	27 (1.06)	440T-MDBSE13*xx* (1)	440T-MDBSS13*xx* (1)
		1 key in / 1 key out	Bolt projected (guard is secured) Primary keys are free (ordered separately) Secondary key 1 is trapped (included w/ product) 2 N.C. safety contacts are in the closed state 1 N.O. contact is in the open state Insert primary key 1 and rotate 90° CW Primary key 1 is now trapped Rotate secondary key 1 to 90° CCW to retract bolt 2 N.C. safety contacts are in the open state 1 N.O. contact in the closed state Secondary key is free (personal key) (guard can be accessed)	0	14 (0.55)	440T MDBSE14*xy* (1) (2)	440T MDBSS14*xy* (1)(2)
				3 (0.11)	17 (0.66)	440T-MDBSE15*xy* (1) (2)	440T-MDBSS15*xy* (1) (2)
				6 (0.23)	20 (0.78)	440T-MDBSE16*xy* (1) (2)	440T-MDBSS16*xy* (1) (2)
				13 (0.51)	27 (1.06)	440T-MDBSE17*xy* (1) (2)	440T-MDBSS17*xy* (1) (2)

(1) Substitute the desired primary code for *x* (key not included). See Key Coding on page 124 for code selection.
(2) Substitute the desired secondary code for *y* (key included). See Key Coding on page 124 for code selection.

Table 80 - Solenoid Bolt Interlock Product Selection

Solenoid Voltage	Contact Type	Type	Keys In / Out	Trapped Key Condition	Bolt Retracted [mm (in.)]	Bolt Extended [mm (in.)]	Cat. No.	
							Standard	Engraved
24V DC	2 N.C. and 1 N.O. break before make	Single key	1 key out	Bolt projected (guard is secure) Primary key 1 is trapped (ordered separately) 2 N.C. safety contacts are in the closed state 1 N.O. contact is in the open state Apply 24V DC to the solenoid Insert primary key 1 and rotate 90° CW to retract bolt 2 N.C. safety contacts are in the open state 1 N.O. contact in the closed state Primary key 1 is free (personal key) (guard can be accessed)	0	14 (0.55)	440T-MSBUE10*x* (1)	440T-MSBUS10*x* (1)
					3 (0.11)	17 (0.66)	440T-MSBUE11*x* (1)	440T-MSBUS11*x* (1)
					6 (0.23)	20 (0.78)	440T-MSBUE12*x* (1)	440T-MSBUS12*x* (1)
					13 (0.51)	27 (1.06)	440T-MSBUE13*x* (1)	440T-MSBUS13*x* (1)
				Bolt retracted (guard can be accessed) Primary key 1 is trapped (ordered separately) 2 N.C. safety contacts are in the open state 1 N.O. contact is in the closed state Apply 24V DC to the solenoid Rotate primary key 1 to 90° CCW to extend bolt 2 N.C. safety contacts are in the closed state 1 N.O. contact in the open state Primary key 1 is free (personal key) (guard is secured)	0	14 (0.55)	440T-MSBUE33*x* (1)	440T-MSBUS33*x* (1)
					3 (0.11)	17 (0.66)	440T-MSBUE34*x* (1)	440T-MSBUS34*x* (1)
					6 (0.23)	20 (0.78)	440T-MSBUE35*x* (1)	440T-MSBUS35*x* (1)
					13 (0.51)	27 (1.06)	440T-MSBUE36*x* (1)	440T-MSBUS36*x* (1)
		Dual key	2 keys in	Bolt projected (guard is secure) Primary keys are free (ordered separately) 2 N.C. safety contacts are in the closed state 1 N.O. contact is in the open state Insert primary key 1 into the lock, then insert primary key 2 Apply 24V DC to the solenoid Rotate both keys 90° CW to retract bolt 2 N.C. safety contacts are in the open state 1 N.O. contact in the closed state Primary keys are trapped (guard can be accessed)	0	14 (0.55)	440T-MDBUE10*xx* (1)	440T-MDBUS10*xx* (1)
					3 (0.11)	17 (0.66)	440T-MDBUE11*xx* (1)	440T-MDBUS11*xx* (1)
					6 (0.23)	20 (0.78)	440T-MDBUE12*xx* (1)	440T-MDBUS12*xx* (1)
					13 (0.51)	27 (1.06)	440T-MDBUE13*xx* (1)	440T-MDBUS13*xx* (1)
			1 key in / 1 key out	Bolt projected (guard is secure) Primary key 1 is free (ordered separately) Secondary key is trapped (included w/ product) 2 N.C. safety contacts are in the closed state 1 N.O. contact is in the open state Insert primary key 1 and rotate 90° CW Primary key 1 is now trapped Apply 24V DC to the solenoid Rotate secondary key 1 to 90° CCW to retract bolt 2 N.C. safety contacts are in the open state 1 N.O. contact in the closed state Secondary key is free (personal key) (guard can be accessed)	0	14 (0.55)	440T-MDBUE14*xy* (1)(2)	440T-MDBUS14*xy* (1)(2)
					3 (0.11)	17 (0.66)	440T-MDBUE15*xy* (1)(2)	440T-MDBUS15*xy* (1)(2)
					6 (0.23)	20 (0.78)	440T-MDBUE16*xy* (1)(2)	440T-MDBUS16*xy* (1)(2)
					13 (0.51)	27 (1.06)	440T-MDBUE17*xy* (1)(2)	440T-MDBUS17*xy* (1)(2)

(1) Substitute the desired primary code for *x* (key not included). See Key Coding on page 124 for code selection.
(2) Substitute the desired secondary code for *y* (key included). See Key Coding on page 124 for code selection.

Accessories

Description	Additional Information	Cat. No.
Stainless-steel key	See Accessories on page 166.	440T-AKEYE10*x* (1)
Stainless-steel replacement code barrel for products other than 100 A RPS/RKS units		440T-ASCBE14*x* (1)
Stainless-steel weatherproof replacement dust cap		440T-ASFC10*x* (1)
Stainless-steel ejector key		440T-AKEYE13*x* (1)

(1) Substitute the desired primary code for *x* (key not included). See Key Coding on page 124 for code selection.

Approximate Dimensions

Figure 162 - Single Key [mm (in.)]

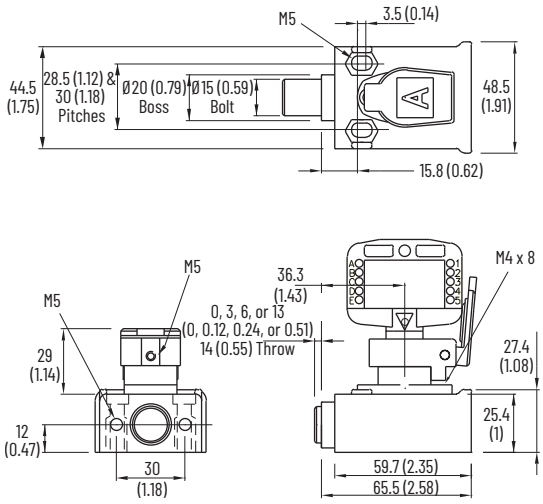

Figure 163 - Dual Key [mm (in.)]

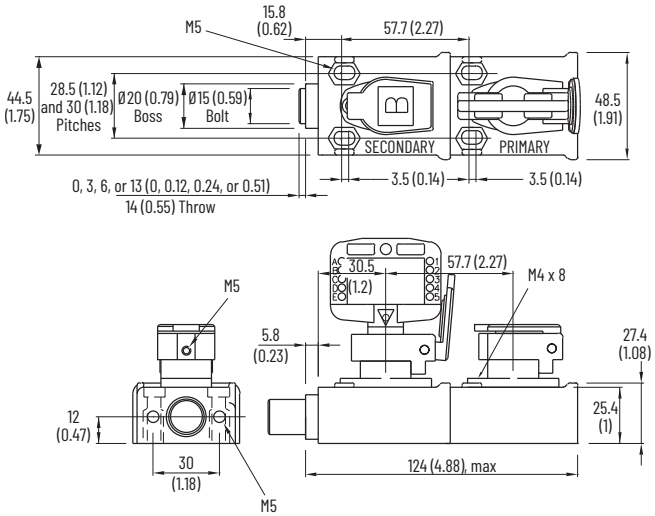

Figure 164 - Triple Key [mm (in.)]

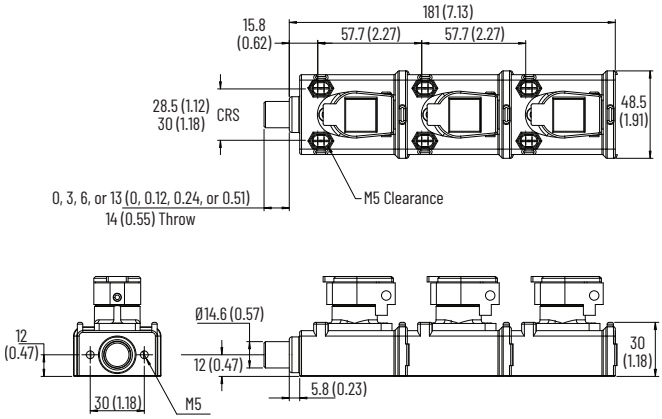

Figure 165 - Quad Key [mm (in.)]

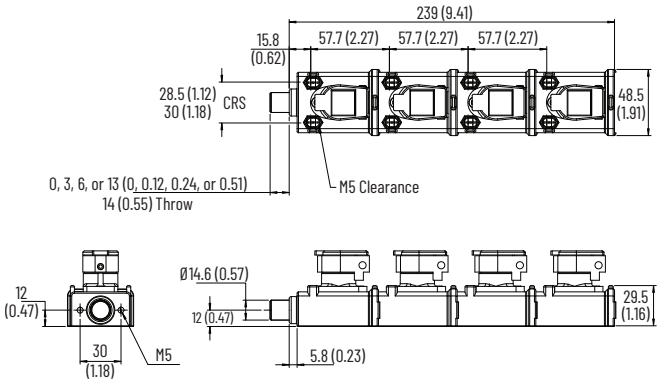

Figure 166 - Prosafe Bolt Lock with Electrical Isolation - One Key [mm (in.)]

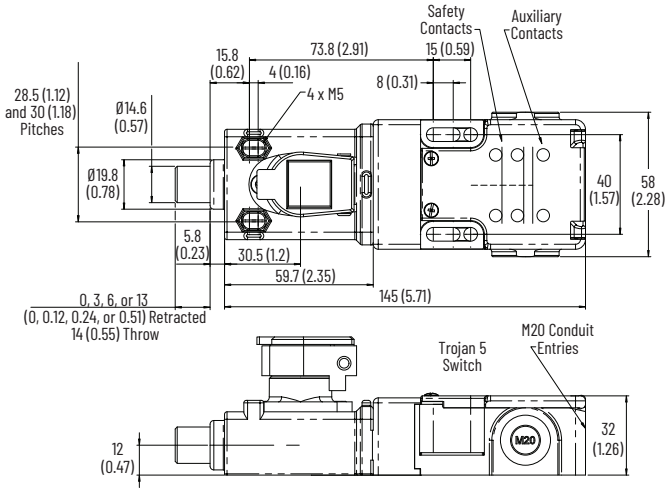

Figure 167 - Prosafe Bolt Lock with Electrical Isolation - Two Keys [mm (in.)]

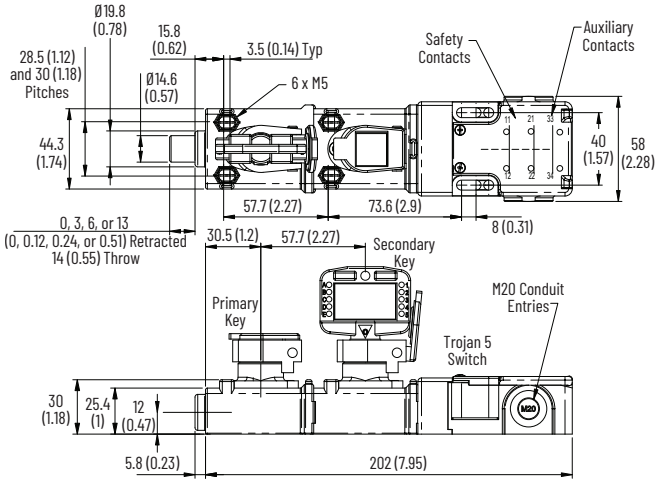

Figure 168 - Prosafe Bolt Lock Solenoid Locked with Electrical Isolation - One Key [mm (in.)]

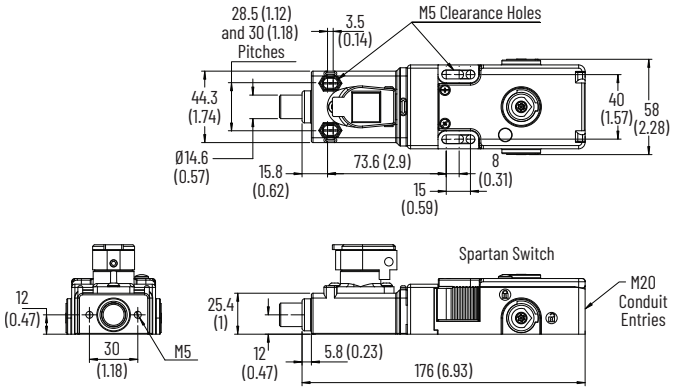

Figure 169 - Prosafe Bolt Lock Solenoid Locked with Electrical Isolation - Two Keys [mm (in.)]

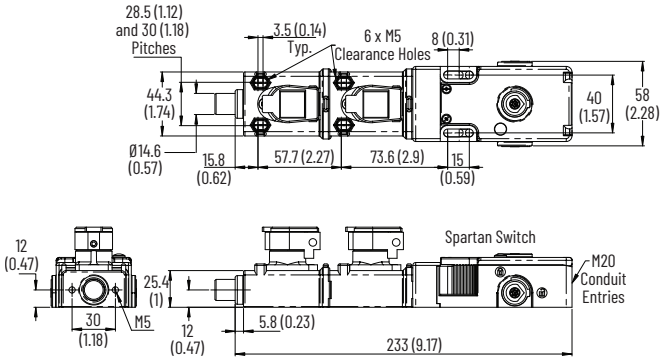

Access and Chains Trapped Key Interlock Switches

The access and chains trapped key interlock switches have the following features:

- 316L stainless-steel construction
- Direct-drive operation
- Fitted with tamper resistant screws
- Lever or chain actuator
- Stainless-steel dust cap as standard
- Replaceable code barrel assembly
- Solenoid and electric versions
- Multiple key options

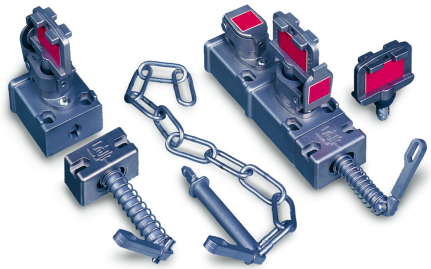

Specifications

Attribute	Access and Chains Trapped Key Interlock Switches
Standards Classification (Safety)	EN ISO 14119 and GS-ET-31, and can be used in safety application up to category 3, PLd in accordance with EN ISO 13849-1, and in the application area of EN 60204-1.
Functional Safety Data	PFHD = 1.00E-7 (probability of dangerous failure per hr); T1 = 20 (Proof test interval)
Certifications	CE Marked for all applicable EU directives, UKCA Marked for all applicable regulations, TÜV Certified rok.auto/certifications
Operating temperature [°C (°F)]	-40...+80 (-40...+176)
Relative humidity	95%
Mechanical life	200,000 operations
Shear force to key	15.1 kN (3394.62 lbf)
Torque to key [N•m (lb•in)]	14 (10.33)
Material	Faceplate: 316L stainless steel
Mounting	• SAL and SCL: 2 or 4 x M5 counter-bored from top or 2 or 4 x M5 from underside with nuts • DAL and DCL: 4 or 6 x M5 counter-bored from top or 4 or 6 x M5 from underside with nuts
Weight	• SAL and SCL: 0.8 kg (1.8 lb) • DAL and DCL: 1.35 kg (3 lb)
Misalignment tolerance [mm (in.)]	±10 (0.39)

Product Selection

Table 81 - Mechanical Interlock Switch Product Selection

Type	Actuator Type	Keys In / Out	Trapped Key Condition	Cat. No.	
				Standard	Engraved
Single key	Lever	1 key in	Lever inserted (guard is secured) Primary key 1 is free (ordered separately) Insert primary key 1 and rotate 90° CW Turn lever 90° CCW to release the lever Primary key 1 is now trapped (guard can be accessed)	440T-MSALE10*x* (1)	440T-MSALS10*x* (1)
	Chain		Chain/lever inserted (guard is secured) Primary key 1 is free (ordered separately) Insert primary key 1 and rotate 90° CW Turn lever 90° CCW to release the chain/lever Primary key 1 is now trapped (guard can be accessed)	440T-MSCLE10*x* (1)	440T-MSCLS10*x* (1)
	Extended lever		Extended lever inserted (guard is secured) Primary key 1 is free (ordered separately) Insert primary key 1 and rotate 90° CW Turn lever 90° CCW to release the lever Primary key 1 is now trapped (guard can be accessed)	440T-MSALE20*x* (1)	440T-MSALS20*x* (1)
Single key with padlock hasp	Lever		Lever inserted (guard is secured) Hasp retracted Primary key 1 is free (ordered separately) Insert primary key 1 and rotate 90° CW Turn lever 90° CCW to release the lever Primary key 1 is now trapped (guard can be accessed)	440T-MSALE11*x* (1)	440T-MSALS11*x* (1)
	Chain		Chain/lever inserted (guard is secured) Hasp retracted Primary key 1 is free (ordered separately) Insert primary key 1 and rotate 90° CW Turn lever 90° CCW to release the chain/lever Primary key 1 is now trapped (guard can be accessed)	440T-MSCLE11*x* (1)	440T-MSCLS11*x* (1)
Dual key	Lever	1 key in/ 1 key out	Lever inserted (guard is secure) Primary key 1 is free (ordered separately) Secondary key 1 is trapped (included w/ product) Insert primary key 1 into the lock and rotate 90° CW Rotate secondary key 190° CCW to release the lever Primary key 1 is now trapped (Guard can be accessed) Secondary key 1 is free (personal key)	440T-MDALE10*xy* (1)(2)	440T-MDALS10*xy* (1)(2)
		2 keys in	Lever inserted (guard is secure) Primary key 1 free (ordered separately) Secondary key 1 is free (ordered separately) Insert primary key 1 and rotate 90° CW Insert secondary key 1 and rotate 90° CW Turn lever 90° CCW to release the lever Primary keys 1 and 2 are now trapped (guard can be accessed)	440T-MDALE11*xx* (1)	440T-MDALS11*xx* (1)
	Chain	1 key in/ 1 key out	Chain/lever inserted (guard is secure) Primary key 1 is free (ordered separately) Secondary key 1 is trapped (included w/ product) Insert primary key 1 into the lock and rotate 90° CW Rotate secondary key 190° CCW to release the chain/lever Primary key 1 is now trapped (guard can be accessed) Secondary key 1 is free (personal key)	440T-MDCLE10*xy* (1)(2)	440T-MDCLS10*xy* (1)(2)
		2 keys in	Chain/lever inserted (guard is secure) Primary key 1 free (ordered separately) Secondary key 1 is free (ordered separately) Insert primary key 1 and rotate 90° CW Insert secondary key 1 and rotate 90° CW Turn lever 90° CCW to release the chain/lever Primary keys 1 and 2 are now trapped (guard can be accessed)	440T-MDCLE11*xx* (1)	440T-MDCLS11*xx* (1)
Dual key with padlock hasp	Lever	1 key in/ 1 key out	Lever inserted (guard is secure) Hasp retracted Primary key 1 is free (ordered separately) Secondary key 1 is trapped (included w/ product) Insert primary key 1 into the lock and rotate 90° CW Rotate secondary key 190° CCW to release the lever Primary key 1 is now trapped (guard can be accessed) Secondary key 1 is free (personal key)	440T-MDALE45*xy* (1)(2)	440T-MDALS45*xy* (1)(2)

Table 81 - Mechanical Interlock Switch Product Selection (Continued)

Type	Actuator Type	Keys In / Out	Trapped Key Condition	Cat. No.	
				Standard	Engraved
Dual key with eject key	Lever	1 key in/ 1 key out	Lever inserted (guard is secure) Primary key 1 free (ordered separately) Secondary key 1 is trapped (included w/ product) Insert primary key 1 and rotate 90° CW Rotate secondary key 1 to 90° CCW to release lever Primary key 1 is now trapped (guard can be accessed) Secondary key 1 ejects free from the lock (personal key)	440T-MDALJ10*xy* (1)	440T-MDALT10*xy* (1)
	Chain	1 key in/ 1 key out	Chain/lever inserted (guard is secure) Primary key 1 free (ordered separately) Secondary key 1 is trapped (included w/ product) Insert primary key 1 and rotate 90° CW Rotate secondary key 1 to 90° CCW to release the chain/lever Primary key 1 is now trapped (guard is secure) Secondary key 1 ejects free from the lock (personal key)	440T-MDCLJ10*xy* (1)(2)	440T-MDCLT10*xy* (1)(2)
Triple key	Lever	1 key in/ 2 keys out	Lever inserted (guard is secure) Primary key 1 free (ordered separately) Secondary key 1 and key 2 are trapped (included w/ product) Insert primary key 1 into the lock and rotate 90° CW Rotate secondary keys in sequence 90° CCW to release Lever Primary key 1 is now trapped (guard can be accessed) Secondary keys are free (personal keys)	440T-MTALE11*xyy* (1)(2)	440T-MTALS11*xyy* (1)(2)
	Chain	1 key in/ 2 keys out	Chain/lever inserted (guard is secured) Primary key 1 free (ordered separately) Secondary key 1 and key 2 are trapped (included w/ product) Insert primary key 1 into the lock and rotate 90° CW Rotate secondary keys in sequence 90° CCW to release Chain/lever Primary key 1 is now trapped (guard can be accessed) Secondary keys are free (personal keys)	440T-MTCLE11*xyy* (1)(2)	440T-MTCLS11*xyy* (1)(2)
Quad key	Lever	1 key in/ 3 keys out	Lever inserted (guard is secure) Primary key 1 free (ordered separately) Secondary key 1, key 2, and key 3 are trapped (included w/ product) Insert primary key 1 into the lock and rotate 90° CW Rotate secondary keys in sequence 90° CCW to release Lever Primary key 1 is now trapped (guard can be accessed) Secondary keys are free (personal keys)	440T-MQALE11*xyy* (1)(2)	440T-MQALS11*xyy* (1)(2)
Five-way key	Lever	1 key in/ 4 keys out	Lever inserted (guard is secure) Primary key 1 free (ordered separately) Secondary key 1, key 2, key 3, and key 4 are trapped (included w/ product) Insert primary key 1 into the lock and rotate 90° CW Rotate secondary keys in sequence 90° CCW to release Lever Primary key 1 is now trapped (guard can be accessed) Secondary keys are free (personal keys)	440T-MPALE11*xyy* (1)(2)	440T-MPALS11*xyy* (1)(2)
	Ejector key	1 key in/ 4 keys out	Lever inserted (guard is secure) Primary key 1 free (ordered separately) Secondary key 1, key 2, key 3, and key 4 are trapped (included w/ product) Insert primary key 1 into the lock and rotate 90° CW Rotate secondary keys in sequence 90° CCW to release Lever Primary key 1 is now trapped (guard can be accessed) Secondary keys eject free from the lock (personal keys)	440T-MPALJ11*xyy* (1)(2)	440T-MPALT11*xyy* (1)(2)

(1) Substitute the desired primary code for *x* (key not included). See Key Coding on page 124 for code selection.
(2) Substitute the desired secondary code for *y* (key included). See Key Coding on page 124 for code selection.

Table 82 - Electrical and Solenoid Interlock Switch Product Selection

Contact Type	Type	Actuator Type	Keys In/Out	Trapped Key Condition	Cat. No.	
					Standard	Engraved
2 N.C. and 1 N.O. break before make	Dual key	Lever	1 key in/ 1 key out	Lever inserted (guard is secured) Primary key 1 is free (ordered separately) Secondary key 1 is trapped (included w/ product) 2 N.C. safety contacts are in the closed state 1 N.O. contact is in the open state Insert primary key 1 into the lock and rotate 90° CW 2 N.C. safety contacts are in the open state 1 N.O. contact in the closed state Rotate secondary key 1 to 90° CCW to release the lever Primary key is now trapped (guard can be accessed) Secondary key is free (personal key)	440T-MDASE20*xy* (1)(2)	440T-MDASS20*xy* (1)(2)
			2 keys in	Lever inserted (guard is secured) Primary key 1 free (ordered separately) Secondary key 1 is free (ordered separately) 2 N.C. safety contacts are in the closed state 1 N.O. contact is in the open state Insert primary key 1 and rotate 90° CW Primary key 1 is now trapped Insert secondary key 1 and rotate 90° CW to release lever 2 N.C. safety contacts are in the open state 1 N.O. contact in the closed state Secondary key is trapped (guard can be accessed)	440T-MDASE20*xy* (1)(2)	440T-MDASS21*xy* (1)(2)
		Chain	1 key in/ 1 key out	Chain/lever inserted (guard is secured) Primary key 1 is free (ordered separately) Secondary key 1 is trapped (included w/ product) 2 N.C. safety contacts are in the closed state 1 N.O. contact is in the open state Insert primary key 1 into the lock and rotate 90° CW 2 N.C. safety contacts are in the open state 1 N.O. contact in the closed state Rotate secondary key 1 to 90° CCW to release the chain/lever Primary key is now trapped (guard can be accessed) Secondary key is free (personal key)	440T-MDCSE20*xy* (1)(2)	440T-MDCSS20*xy* (1)(2)
			2 keys in	Chain/lever inserted (guard is secured) Primary key 1 free (ordered separately) Secondary key 1 is free (ordered separately) 2 N.C. safety contacts are in the closed state 1 N.O. contact is in the open state Insert primary key 1 and rotate 90° CW Primary key 1 is now trapped Insert secondary key 1 and rotate 90° CW to release chain/lever 2 N.C. safety contacts are in the open state 1 N.O. contact in the closed state Secondary key is trapped (guard can be accessed)	440T-MDCSE21*xx* (1)	440T-MDCSS21*xx* (1)
Solenoid		Lever	1 key in/ 1 key out	Lever Inserted – contacts closed (guard is secure) Primary key 1 is free (ordered separately) Secondary key 1 is trapped (included w/ product) 2 N.C. safety contacts are in the closed state 1 N.O. contact is in the open state Insert primary key 1 (cannot be rotated until power is applied to the solenoid) Apply 24V DC to the solenoid 2 N.C. safety contacts are in the open state 1 N.O. contact in the closed state Rotate primary key 1 to 90° CW, key is now trapped Rotate secondary key 1 to 90° CCW to release the lever Secondary key 1 is free (personal key) (guard can be accessed)	440T-MDAUE20*xy* (1)(2)	

(1) Substitute the desired primary code for *x* (key not included). See Key Coding on page 124 for code selection.
(2) Substitute the desired secondary code for *y* (key included). See Key Coding on page 124 for code selection.

Accessories

Description	Additional Information	Cat. No.
Stainless-steel key	See Accessories on page 166.	440T-AKEYE10x [1]
Stainless-steel replacement code barrel for products other than 100 A RPS/RKS units		440T-ASCBE14x [1]
Stainless-steel weatherproof replacement dust cap		440T-ASFC10x [1]
Replacement spare block catch		440T-ACAD10
Replacement spare chain catch		440T-ACHA10
Stainless-steel ejector key		440T-AKEYE13x [1]

(1) Substitute the desired primary code for *x* (key not included). See Key Coding on page 124 for code selection.

Approximate Dimensions

Figure 170 - Mechanical, Single Key, Lever Actuator [mm (in.)]

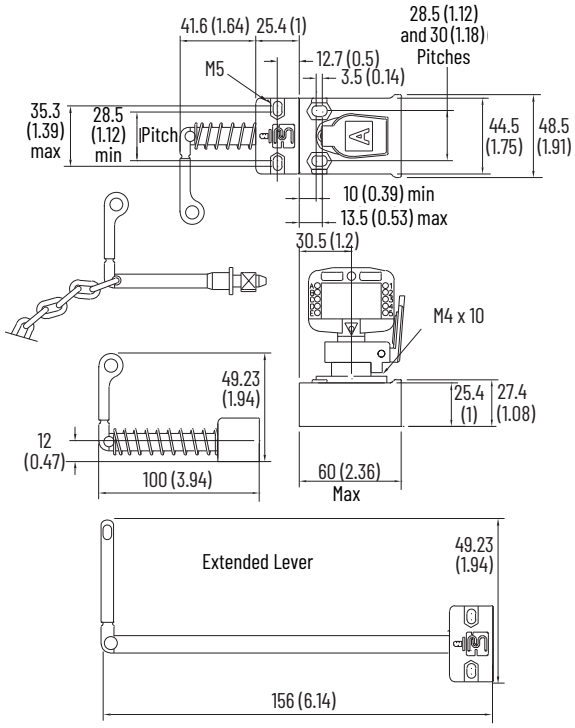

Figure 171 - Mechanical, Dual Key, Lever Actuator [mm (in.)]

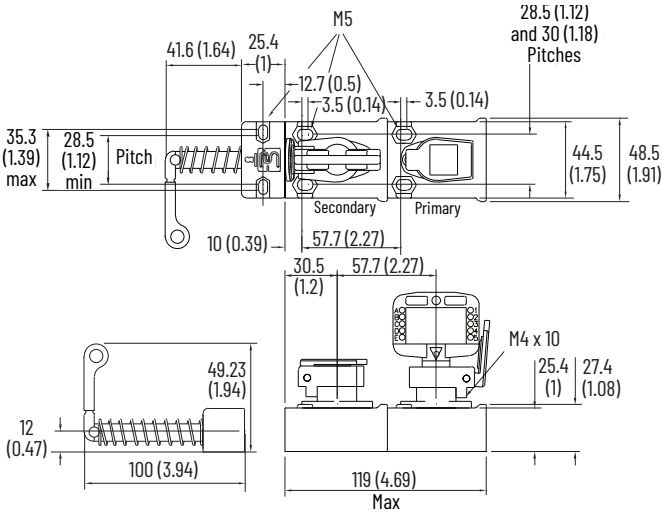

Figure 172 - Mechanical, Five Way, Lever Actuator [mm (in.)]

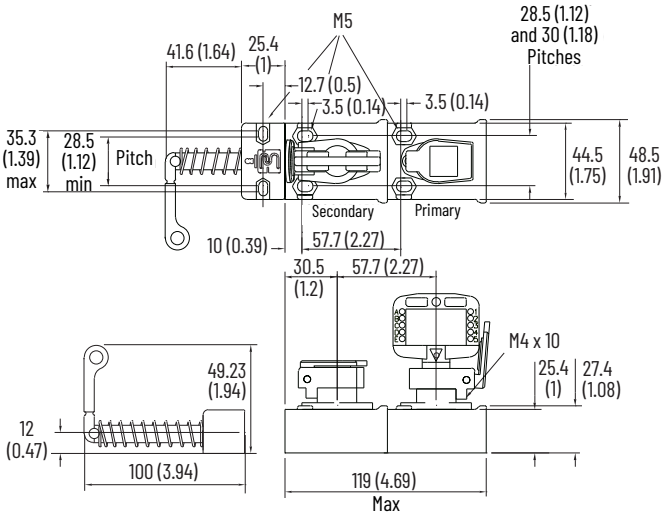

Figure 173 - Electrical, Dual Key, Chain Actuator [mm (in.)]

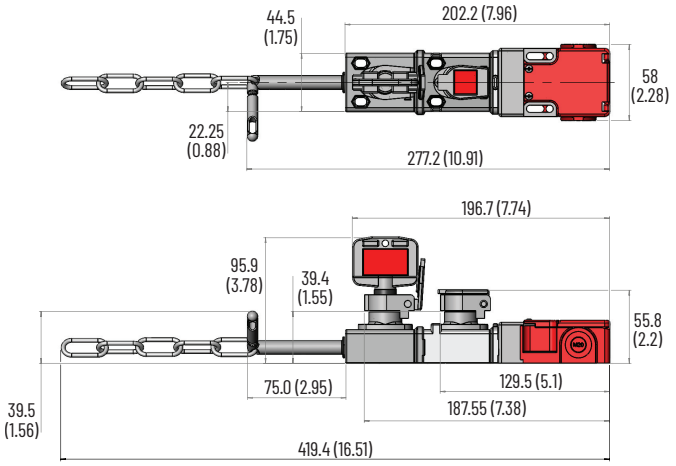

Figure 174 - Electrical, Dual Key, Lever Actuator [mm (in.)]

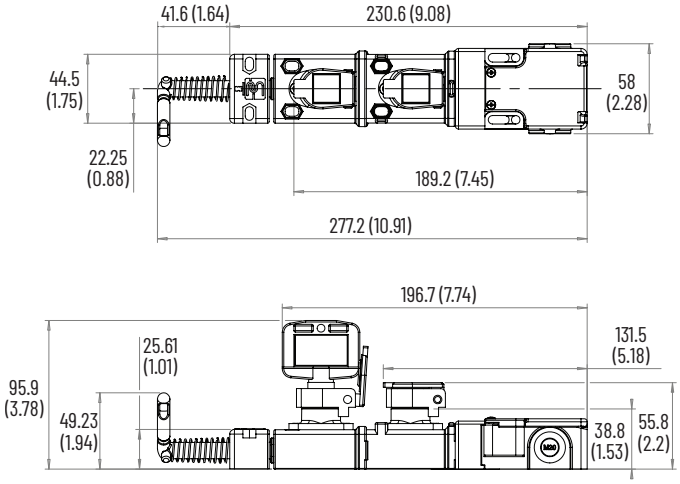

Figure 175 - Solenoid, Dual Key, Lever Actuator [mm (in.)]

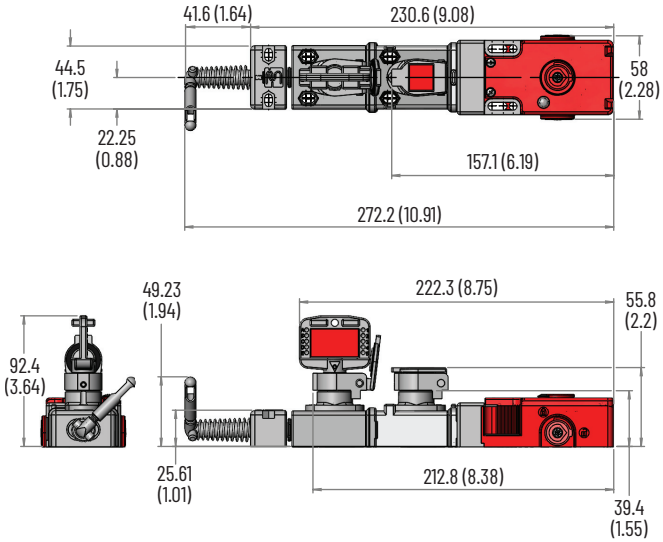

Prosafe Slamlock Mechanical Interlock Switches

The Prosafe® Slamlock™ mechanical interlock switches have the following features:

- 316L stainless-steel construction
- Selection of actuator types available
- Direct-drive operation
- Replaceable code barrel assembly
- Fitted with tamper resistant screws
- Weatherproof stainless-steel dust cap as standard
- Multiple key options

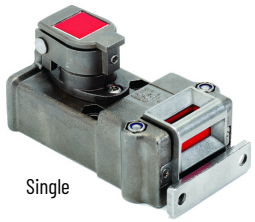

Single

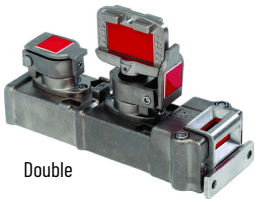

Double

Specifications

Attribute	Prosafe Slamlock Mechanical Interlock Switches
Standards Classification (Safety)	EN ISO 14119 and GS-ET-31, and can be used in safety application up to category 3, PLd in accordance with EN ISO 13849-1, and in the application area of EN 60204-1.
Functional Safety Data	PFHD = 1.00E-7 (probability of dangerous failure per hr); T1 = 20 (Proof test interval)
Certifications	CE Marked for all applicable EU directives, UKCA Marked for all applicable regulations, TÜV Certified rok.auto/certifications
Operating temperature [°C (°F)]	-40...+80 (-40...+176)
Relative humidity	95%
Mechanical life	200,000 operations
Shear force to key, max	15.1 kN (3394.62 lbf)
Torque to key, max [N•m (lb•in)]	14 (10.33)
Material	316L stainless steel
Mounting	• SSL: 2 x M5 counter-bored from top or 2 x M5 from underside with nuts • DSS: 4 x M5 counter-bored from top or 4 x M5 from underside with nuts
Weight	• Single key: 0.76 kg (1.68 lb) • Dual key: 1.33 kg (2.93 lb)
Holding force, max	2000 N (450 lb)

Product Selection

Table 83 - Prosafe Slamlock Mechanical Interlock Switch Product Selection

Type	Actuator Type	Keys In / Out	Trapped Key Condition	Cat. No.	
				Standard	Engraved
Single key	Standard	1 key in	Actuator is inserted (guard is secure) Primary key 1 free (ordered separately) Insert primary key 1 and rotate 90° CW Actuator is released Primary key is now trapped (guard can be accessed)	440T-MSSLE10*x* (1)	440T-MSSLS10*x* (1)
	Flexible			440T-MSSLE11*x* (1)	440T-MSSLS11*x* (1)
	Flat			440T-MSSLE12*x* (1)	440T-MSSLS12*x* (1)
Dual key	Standard	1 key in / 1 key out	Actuator is inserted (guard is secure) Primary key 1 is free (ordered separately) Secondary Key 1 is trapped (included w/ product) Insert primary key 1 and rotate 90° CW Rotate secondary key 1 to 90° CCW to release the actuator Primary key 1 is now trapped (guard is secure) Secondary key 1 is free (personal key)	440T-MDSLE10*xy* (1)(2)	440T-MDSLS10*xy* (1)(2)
	Flexible			440T-MDSLE11*xy* (1)(2)	440T-MDSLS11*xy* (1)(2)
	Flat			440T-MDSLE12*xy* (1)(2)	440T-MDSLS12*xy* (1)(2)
	Standard	2 keys in	Actuator is inserted (guard is secure) Primary keys are free (ordered separately) Insert primary key 1 and rotate 90° CW Insert primary key 2 and rotate 90° CW to release the actuator Primary keys are now trapped (guard can be accessed)	440T-MDSLE20*xx* (1)	440T-MDSLS20*xx* (1)
	Flexible			440T-MDSLE22*xx* (1)	440T-MDSLS22*xx* (1)
	Flat			440T-MDSLE23*xx* (1)	440T-MDSLS23*xx* (1)
Dual with secondary ejector key	Standard	1 key in / 1 key out	Actuator is inserted (guard is secure) Primary key 1 free (ordered separately) Secondary ejector key 1 is trapped (included w/ product) Insert primary key 1 and rotate 90° CW Rotate secondary key 1 to 90° CCW to release actuator Primary key 1 is now trapped (guard is secure) Secondary key 1 ejects free from the lock (personal key)	440T-MDSLJ10*xy* (1)(2)	440T-MDSLT10*xy* (1)(2)
	Flexible			440T-MDSLJ11*xy* (1)(2)	440T-MDSLT11*xy* (1)(2)
	Flat			440T-MDSLJ12*xy* (1)(2)	440T-MDSLT12*xy* (1)(2)

(1) Substitute the desired primary code for *x* (key not included). See Key Coding on page 124 for code selection.
(2) Substitute the desired secondary code for *y* (key included). See Key Coding on page 124 for code selection.

Accessories

Description	Additional Information	Cat. No.
Stainless-steel key	See Accessories on page 166.	440T-AKEYE10*x* (1)
Stainless-steel replacement code barrel for products other than 100 A RPS/RKS units		440T-ASCBE14*x* (1)
Stainless-steel weatherproof replacement dust cap		440T-ASFC10*x* (1)
GD2 standard actuator		440G-A27011
GD2 flat actuator		440K-A11112
Fully flexible actuator		440G-A27143
Stainless-steel ejector key		440T-AKEYE13*x* (1)

(1) Substitute the desired primary code for *x* (key not included). See Key Coding on page 124 for code selection.

Approximate Dimensions

Figure 176 - Single Key Slamlock [mm (in.)]

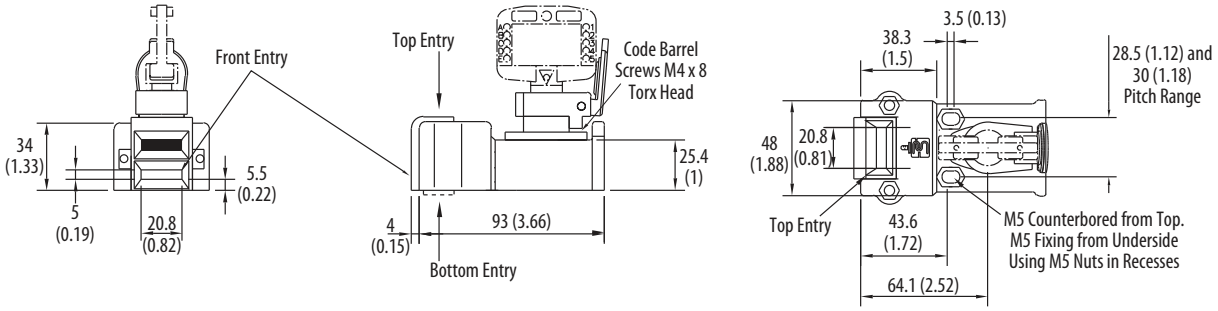

Figure 177 - Dual Key Slamlock [mm (in.)]

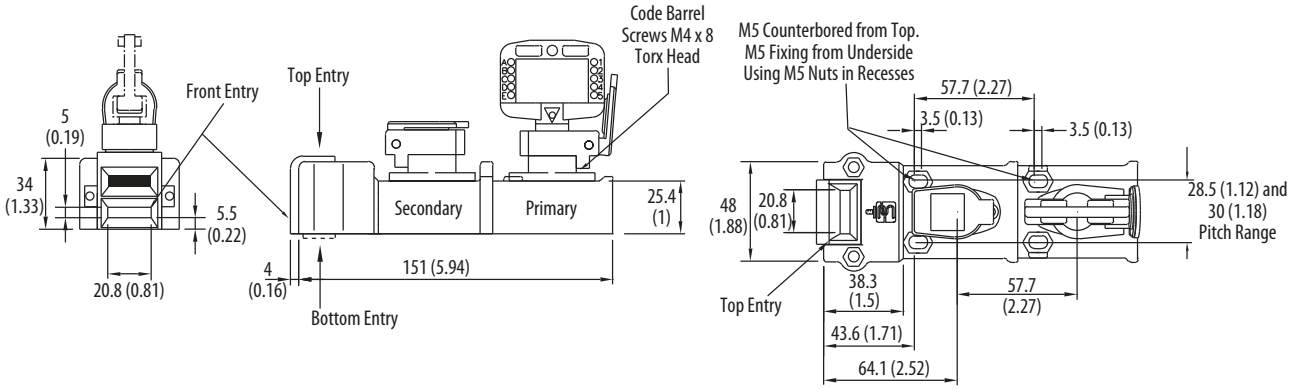

Figure 178 - Actuators [mm (in.)]

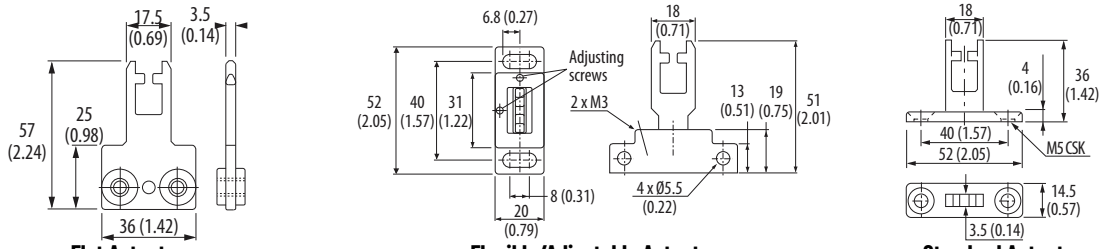

Flat Actuator **Flexible/Adjustable Actuator** **Standard Actuator**

Prosafe Slamlock Electrical Interlock Switches

The Prosafe Slamlock electrical interlock switches have the following features:

- Electrical safety contacts combined with trapped key/enforced sequence feature
- Most of the unit is constructed from 316L stainless steel
- Selection of actuator types available
- Single or dual key versions available
- Direct-drive operation
- Replaceable code barrel assembly
- Weatherproof stainless-steel dust cap as standard
- Solenoid versions

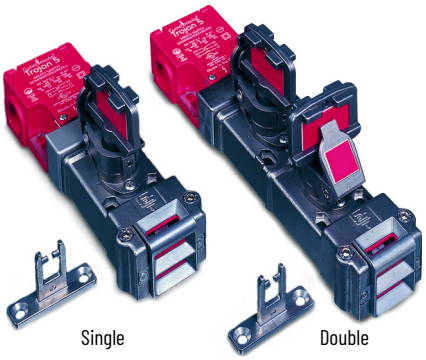

Specifications

Attribute	Prosafe Slamlock Electrical Interlock Switches		
Standards Classification (Safety)	EN ISO 14119 and GS-ET-31, and can be used in safety application up to category 3, PLd in accordance with EN ISO 13849-1, and in the application area of EN 60204-1.		
Functional Safety Data	PFHD = 1.00E-7 (probability of dangerous failure per hr); T1 = 20 (Proof test interval)		
Certifications	CE Marked for all applicable EU directives, UKCA Marked for all applicable regulations, TÜV Certified rok.auto/certifications		
Operating temperature [°C (°F)]	-20...+80 (-4...+176)		
Relative humidity	95%		
Mechanical life	200,000 operations		
Shear force to key, max	15.1 kN (3394.62 lbf)		
Torque to key, max [N•m (lb•in)]	14 (10.33)		
Case material	• 316L stainless steel • UL approved glass-filled polyester		
Actuator material	Stainless steel		
Mounting	• SSS: 4 x M5 counter-bored from top or 4 x M5 from underside with nuts • DSS: 6 x M5 counter-bored from top or 6 x M5 from underside with nuts		
Weight	• SSE: 1160 kg (2.6 lb) • DSSE: 1700 kg (3.7 lb)		
Holding force, max	2000 N (450 lb)		
Releasable load, max	100 N (22.5 lb)		
Safety contacts	2 N.C. positive break		
AC 15—Ue	500V	250V	100V
AC 15—Ie	1 A	2 A	5 A
DC	250V	0.5 A, 24V	2 A
Switching current at voltage, max	500V/500V A		
Thermal current (I_{th})	10 A		
Current, min	5V, 5 mA, DC		
Safety contact gap	>2 x 2 mm (0.07 in)		
Rated insulation voltage (U_i)	500V		
Rated impulse withstand voltage (U_{imp})	2500V		
Auxiliary contacts	1 N.O.		
Pollution degree	3		
Actuator travel for positive opening [mm (in.)]	5 (0.19)		
Operating radius, min [mm (in.)]	175 (6.88) (60 (2.36) with flexible actuator)		
Break contact force, min	12 N (2.7 lbs)		
Actuation speed, max [m/s (ft/s)]	1 (3.28)		
Actuation frequency, max	2 cycle/s		
Conduit entry	3 x M20		
Color	Red/stainless		

Product Selection

Table 84 - Electrical Slamlock Product Selection

Contact Type	Type	Actuator Type	Keys In / Out	Trapped Key Condition	Connector	Cat. No.	
						Standard	Engraved
2 N.C. + 1 N.O. Break before make	Single key	Standard	1 key in	Actuator inserted – contacts closed (guard is secure) Primary key 1 is free (ordered separately) 2 N.C. safety contacts are in the closed state 1 N.O. contact is in the open state Insert the primary 1 key and rotate 90° CW to release the actuator 2 N.C. safety contacts are in the open state 1 N.O. contact in the closed state Primary key 1 is now trapped (guard can be accessed)	QD M12 (6-pin dual key)	440T-MS3470*x* (1)	-
					M20 conduit entry	440T-MSSSE10*x* (1)	440T-MSSSS10*x* (1)
		Flexible				440T-MSSSE11*x* (1)	440T-MSSSS11*x* (1)
		Flat				440T-MSSSE12*x* (1)	440T-MSSSS12*x* (1)
		Standard	1 key out	Actuator inserted – contacts closed (guard is secure) Primary key 1 trapped (ordered separately) 2 N.C. safety contacts are in the closed state 1 N.O. contact is in the open state Rotate primary key 1 to 90° CCW to release the actuator 2 N.C. safety contacts are in the open state 1 N.O. contact in the closed state Primary key is now free (guard can be accessed)		440T-MSSSE20*x* (1)	440T-MSSSS20*x* (1)
		Flexible				440T-MSSSE22*x* (1)	440T-MSSSS22*x* (1)
		Flat				440T-MSSSE23*x* (1)	440T-MSSSS23*x* (1)
	Dual key	Standard	1 key in / 1 key out	Actuator inserted - contacts closed (guard is secure) Primary key 1 is free (ordered Separately) Secondary key 1 is trapped (included w/ product) 2 N.C. safety contacts are in the closed state 1 N.O. contact is in the open state Insert primary key 1 into the lock and rotate 90 degrees CW Primary key 1 is now trapped Rotate secondary key 1 CCW to release the actuator 2 N.C. safety contacts are in the open state 1 N.O. contact in the closed state Secondary key 1 is now free (guard can be accessed)		440T-MDSSE10*xy* (1)(2)	440T-MDSSS10*xy* (1)(2)
		Flexible				440T-MDSSE11*xy* (1)(2)	440T-MDSSS11*xy* (1)(2)
		Flat				440T-MDSSE12*xy* (1)(2)	440T-MDSSS12*xy* (1)(2)
		Standard		Actuator inserted - contacts closed (guard is secure) Primary key 1 is free (ordered separately) Secondary ejector key 1 is trapped (included w/ product) 2 N.C. safety contacts are in the closed state 1 N.O. contact is in the open state Insert primary key 1 and rotate 90 degrees CW Primary key 1 is now trapped Rotate secondary key 1 - 90 degrees CCW to release the actuator 2 N.C. safety contacts are in the open state 1 N.O. contact in the closed state Secondary key 1 will eject free from the lock (personal key) (guard can be accessed)		440T-MDSSJ10*xy* (1) (2)	440T-MDSST10*xy* (1) (2)
		Flexible				440T-MDSSJ11*xy* (1) (2)	440T-MDSST11*xy* (1)(2)
		Flat				440T-MDSSJ12*xy* (1) (2)	440T-MDSST12*xy* (1) (2)
		Standard	2 keys in	Actuator inserted - contacts closed (guard is secure) Primary key 1 is free (ordered separately) Primary key 2 is free (ordered separately) 2 N.C. safety contacts are in the closed state 1 N.O. contact is in the open state Insert primary key 1 and rotate 90 degrees CW Insert primary key 2 and rotate 90 degrees CW to release actuator 2 N.C. safety contacts are in the open state 1 N.O. contact in the closed state Primary keys are now trapped (guard can be accessed)		440T-MDSSE20*xx* (1)	440T-MDSSS20*xx* (1)
		Flexible				440T-MDSSE22*xx* (1)	440T-MDSSS22*xx* (1)
		Flat				440T-MDSSE23*xx* (1)	440T-MDSSD23*xx* (1)
2 N.C. + 2 N.O. Break before make	Single key	Standard	1 key in	Actuator inserted – contacts closed (guard is secure) Primary keys are free (ordered separately) 2 N.C. safety contacts are in the closed state 2 N.O. contact is in the open state Insert the primary 1 key and rotate 90° CW to release the actuator 2 N.C. safety contacts are in the open state 1 N.O. contact in the closed state Primary key 1 is now trapped (guard can be accessed)		440T-MSSSE26*x* (1)	440T-MSSSS26*x* (1)
		Flexible				440T-MSSSE27*x* (1)	440T-MSSSS27*x* (1)
		Flat				440T-MSSSE25*x* (1)	440T-MSSSS25*x* (1)

(1) Substitute the desired primary code for *x* (key not included). See Key Coding on page 124 for code selection.
(2) Substitute the desired secondary code for *y* (key included). See Key Coding on page 124 for code selection.

Table 85 - Solenoid Interlock Switch Product Selection

Contact Type	Type	Keys In / Out	Trapped Key Condition	Solenoid Voltage	Actuator Type	Connector	Cat. No.	
							Standard	Engraved
2 N.C. + 1 N.O. Break before make	Single key	1 key out	Actuator inserted – contacts closed (guard is secure) Primary key 1 is trapped (ordered separately) 2 N.C. safety contacts are in the closed state 1 N.O. contact is in the open state Apply 24V DC to the solenoid Rotate primary key 90° CCW to release the actuator 2 N.C. safety contacts are in the open state 1 N.O. contact in the closed state Primary key 1 is now free (guard can be accessed)	24V DC	Standard	M23 (12-pin)	440T-MS3465*x* (1)	-
						M20 conduit entry	440T-MSSUE20*x* (1)	440T-MSSUS20*x* (1)
					Flexible		440T-MSSUE22*x* (1)	440T-MSSUS22*x* (1)
					Flat		440T-MSSUE23*x* (1)	440T-MSSUS23*x* (1)
	Dual key	1 key in / 1 key out	Actuator inserted – contacts closed (guard is secure) Primary key 1 is free (ordered separately) Secondary key 1 trapped (included w/ product) 2 N.C. safety contacts are in the closed state 1 N.O. contact is in the open state Apply 24V DC to the solenoid Insert primary key 1 and rotate 90° CW Primary key 1 is now trapped Rotate secondary key 1 to 90° CCW to release the actuator 2 N.C. safety contacts are in the open state 1 N.O. contact in the closed state Secondary key 1 is now free (personal key) (guard can be accessed)	24V DC	Standard		440T-MDSUE10*xy* (1)(2)	440T-MDSUS10*xy* (1)(2)
					Flexible		440T-MDSUE11*xy* (1)(2)	440T-MDSUE11*xy* (1)(2)
					Flat		440T-MDSUE12*xy* (1)(2)	440T-MDSUS12*xy* (1)(2)
	Single key	1 key out	Actuator inserted – contacts closed (guard is secure) Primary key 1 is trapped (ordered separately) 2 N.C. safety contacts are in the closed state 1 N.O. contact is in the open state Apply 110V AC to the solenoid Rotate primary key 90° CCW to release the actuator 2 N.C. safety contacts are in the open state 1 N.O. contact in the closed state Primary key 1 is now free (guard can be accessed)	110V AC	Standard		440T-MSSUE50*x* (1)	440T-MSSUS50*x* (1)

(1) Substitute the desired primary code for *x* (key not included). See Key Coding on page 124 for code selection.
(2) Substitute the desired secondary code for *y (key included)*. See Key Coding on page 124 for code selection.

Accessories

Description	Additional Information	Cat. No.
Stainless-steel key	See Accessories on page 166.	440T-AKEYE10*x* (1)
Stainless-steel replacement code barrel for products other than 100 A RPS/RKS units		440T-ASCBE14*x* (1)
Stainless-steel weatherproof replacement dust cap		440T-ASFC10*x* (1)
GD2 standard actuator		440G-A27011
GD2 flat actuator		440K-A11112
Fully flexible actuator		440G-A27143
Stainless-steel ejector key		440T-AKEYE13*x* (1)

(1) Substitute the desired primary code for *x* (key not included). See Key Coding on page 124 for code selection.

Approximate Dimensions

Figure 179 - Electrical Single Key Slamlock [mm (in.)]

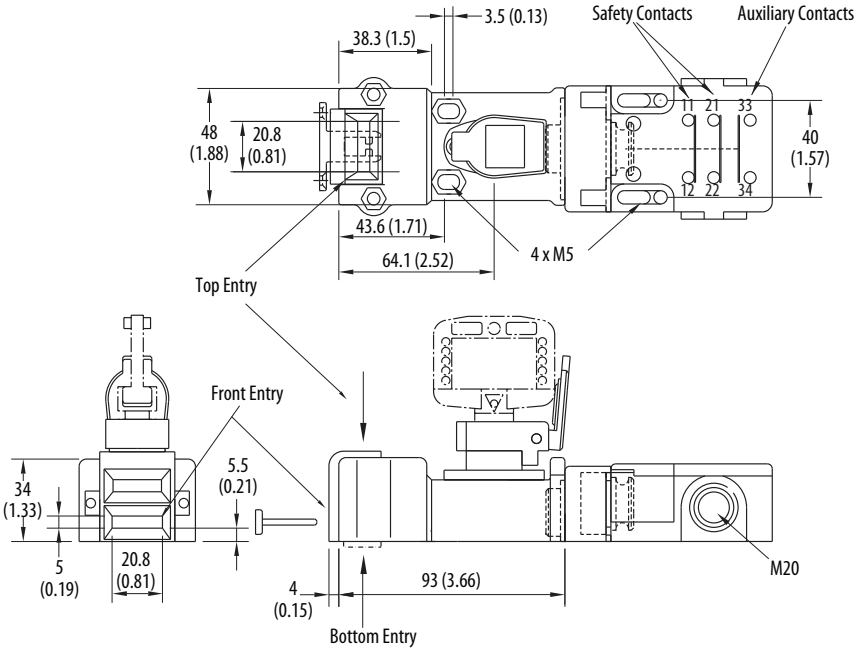

Figure 180 - Electrical Dual Key Slamlock [mm (in.)]

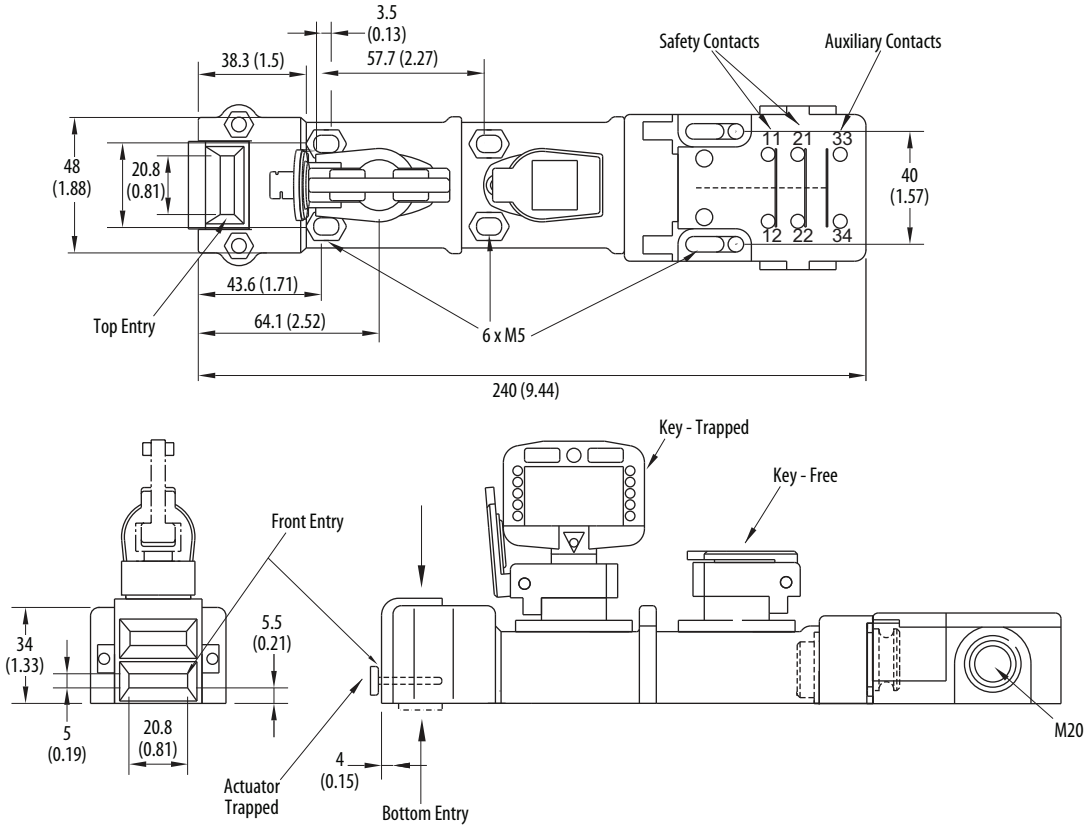

Figure 181 - Solenoid Single Key Slamlock [mm (in.)]

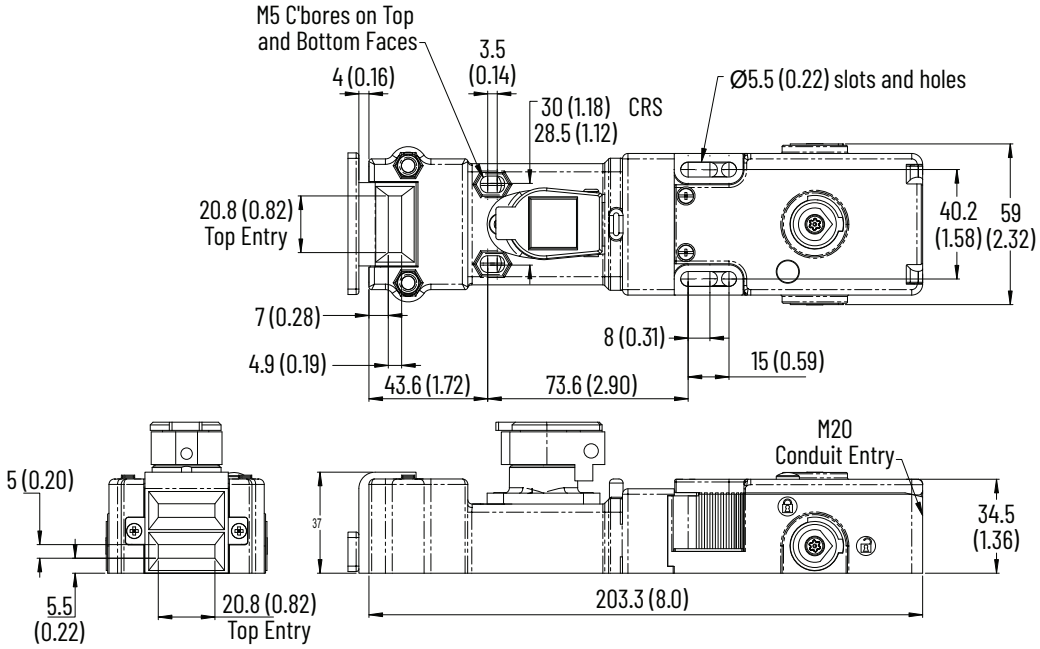

Figure 182 - Solenoid Double Key Slamlock [mm (in.)]

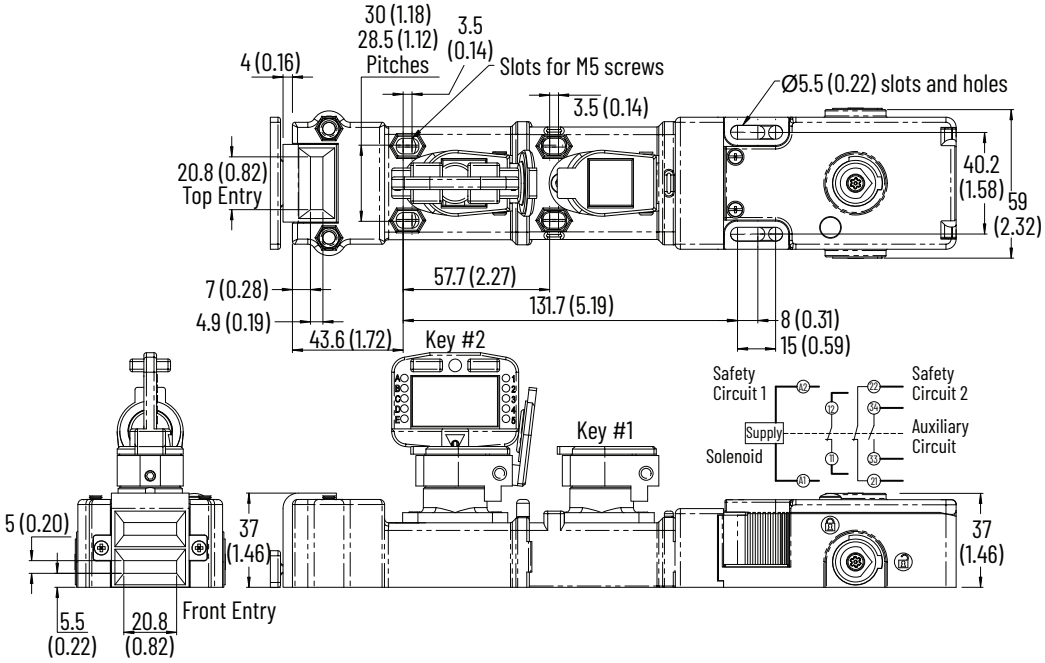

Miniature Valve Trapped Key Interlock Switches

The miniature valve trapped key interlock switches have the following features:

- Direct-drive operation
- Supplied with valves 0.25...2 inch
- Direct body mounting with security screws
- Locked open or locked closed options
- Lower maintenance cost
- Weatherproof stainless-steel dust cap as standard
- Replaceable code barrel assembly
- Valve is chrome-plated brass

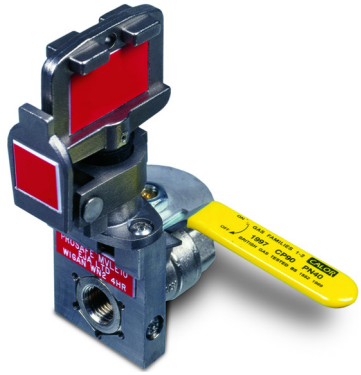

Specifications

Attribute	Miniature Valve Trapped Key Interlock Switches
Standards Classification (Safety)	EN ISO 14119 and GS-ET-31, and can be used in safety application up to category 3, PLd in accordance with EN ISO 13849-1, and in the application area of EN 60204-1.
Functional Safety Data	PFHD = 1.00E-7 (probability of dangerous failure per hr); T1 = 20 (Proof test interval)
Certifications	CE Marked for all applicable EU directives, UKCA Marked for all applicable regulations, TÜV Certified rok.auto/certifications
Operating temperature [°C (°F)]	-40...+80 (-40...+176)
Relative humidity	25...95%
Mechanical life	200,000 operations
Shear force to key, max	15.1 kN (3394.62 lbf)
Torque to key, max [N•m (lb•in)]	14 (10.33)
Pressure, max	2100 kPa
Material	316L stainless steel

Product Selection

Valve Size - Inch BSP (1)	Valve Status	Cat. No. (2)
0.25	Key free/valve locked closed	440T-VMVLE10*x*
0.375		440T-VMVLE11*x*
0.5		440T-VMVLE12*x*
0.25	Key free/valve locked open	440T-VMVLE13*x*
0.375		440T-VMVLE14*x*
0.5		440T-VMVLE15*x*
1.0	Key free/valve locked closed	440T-VMVLE18*x*
	Key free/valve locked open	440T-VMVLE19*x*

(1) BSP = British standard pipe threads
(2) Substitute the desired primary code for *x* (key not included). See Key Coding on page 124 for code selection.

Approximate Dimensions

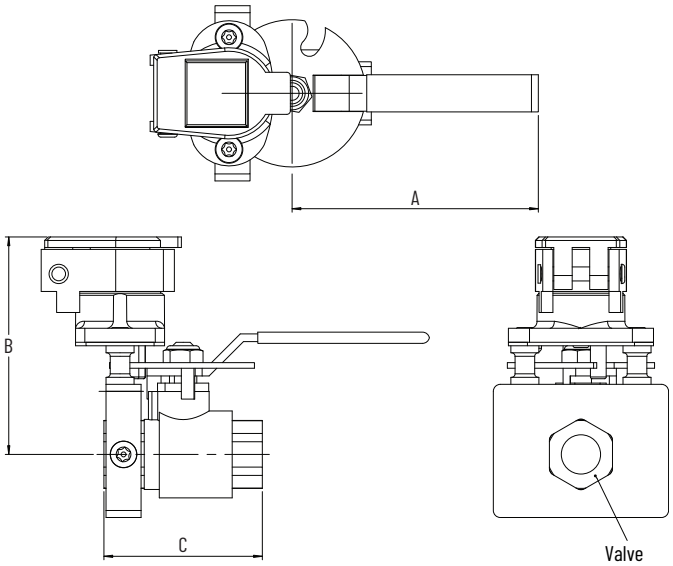

Cat. No.	[mm (in.)]			Valve Size	Pressure [bar (kg/cm²)]
	A	B	C		
440T-VMVLE10	70 [2.75]	62 [2.44]	45 [1.77]	0.25 in. BSP	40
440T-VMVLE11			47 [1.85]	0.375 in. BSP	50
440T-VMVLE12	96 [3.78]	64 [2.52]	62 [2.44]	0.5 in. BSP	40
440T-VMVLE13	70 [2.75]	62 [2.44]	45 [1.77]	0.25 in. BSP	40
440T-VMVLE14			47 [1.85]	0.375 in. BSP	50
440T-VMVLE15	96 [3.78]	64 [2.52]	62 [2.44]	0.5 in. BSP	40
440T-VMVLE18	110 [4.33]	71 [2.79]	84 [3.31]	1 in. BSP	40
440T-VMVLE19					
440T-VMVLE20	162 [6.38]	96 [3.78]	125 [4.92]	2 in. BSP	40
440T-VMVLE21					

Switchgear Adapters

The trapped key switchgear adapters help you lower maintenance costs.

Specifications

Attribute	Switchgear Adapters
Standards Classification (Safety)	EN ISO 14119 and GS-ET-31, and can be used in safety application up to category 3, PLd in accordance with EN ISO 13849-1, and in the application area of EN 60204-1.
Functional Safety Data	PFHD = 1.00E-7 (probability of dangerous failure per hr); T1 = 20 (Proof test interval)
Certifications	CE Marked for all applicable EU directives, UKCA Marked for all applicable regulations, TÜV Certified rok.auto/certifications
Operating temperature [°C (°F)]	-10...+50 (14...122)
Mechanical life	200,000 operations
Shear force to key, max	15.1 kN (3394.62 lbf)
Torque to key, max [N•m (lb•in)]	14 (10.33)
Relative humidity	95%
Weight [kg (lb)]	316L stainless steel
Mounting	2 x M4
Shaft dimensions	3/8 in.^{2} x 7/8 in. long (standard) 9/16 in. diameter x 7/8 in. long (optional, contact your local Allen-Bradley distributor or Rockwell Automation sales office.)

Product Selection (3/8 sq shaft)

Mounting	Trap Direction	Cat. No.
2 x M4	65° clockwise to trap	440T-MSGAU10
	65° counterclockwise to trap	440T-MSGAU11
	90° clockwise to trap	440T-MSGAU12
	90° counterclockwise to trap	440T-MSGAU13
	±90° counterclockwise to trap	440T-MSGAU14
	45° clockwise to trap	440T-MSGAU17
	45° counterclockwise to trap	440T-MSGAU18

Accessories

Description	Additional Information	Cat. No. (1)
Stainless-steel key	See Accessories on page 166.	440T-AKEYE10*x*
Stainless-steel replacement code barrel for products other than 100 A RPS/RKS units		440T-ASCBE14*x*
Stainless-steel weatherproof replacement dust cap		440T-ASFC10*x*

(1) Substitute the desired primary code for *x* (key not included). See Key Coding on page 124 for code selection.

WARNING: The presence of spare keys, override keys, or spare actuators can compromise the integrity of safety interlocking systems. Personal injury or death, property damage, or economic loss can result from the introduction of spare keys, override keys or spare actuators into interlocking systems without appropriate management controls, working procedures and alternative protective measures to control their use and availability.

Approximate Dimensions

Figure 183 - 440T-MSGAU1x and 440T-MSGAU22x [mm (in.)]

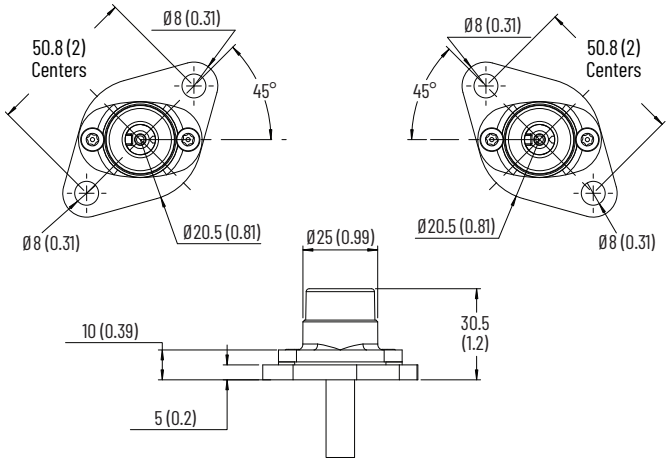

Figure 184 - 440T-MSGAU20x [mm (in.)]

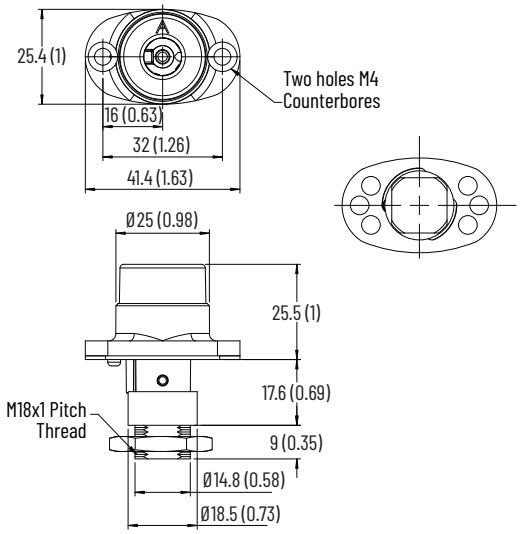

Figure 185 - 440T-MSGAU21x [mm (in.)]

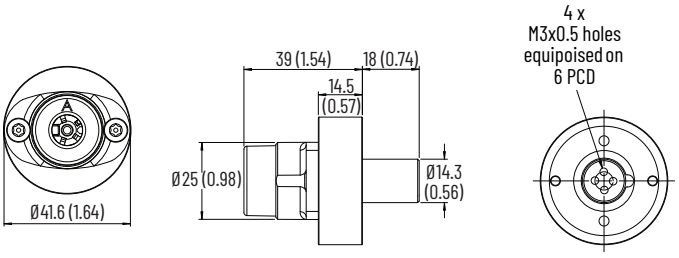

Figure 186 - 440T-MSGAU23x [mm (in.)]

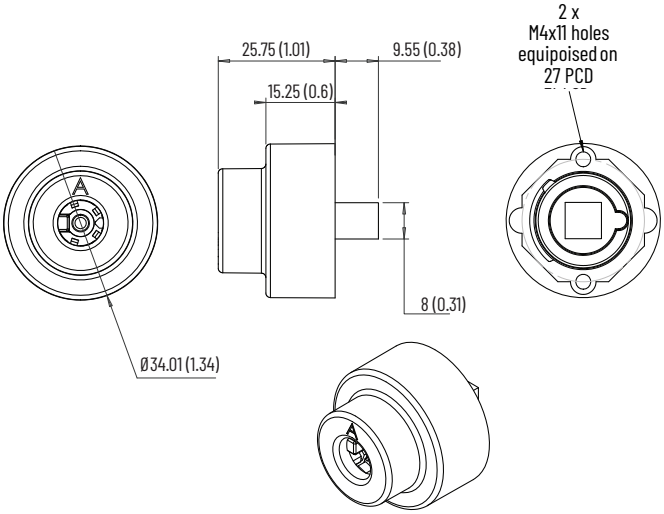

Accessories

Description			Cat. No.
	Stainless-steel key	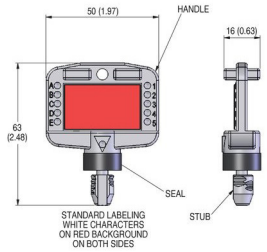	440T-AKEYE10x [1]
	Stainless-steel ejector key	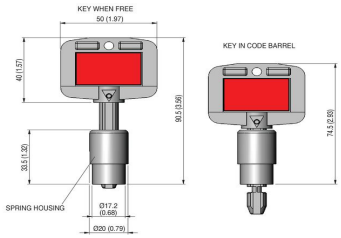	440T-AKEYE13x [1]
	Stainless-steel weatherproof replacement dust cap	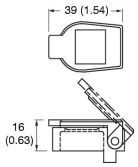	440T-ASFC10x [1]
	Stainless-steel replacement code barrel for 100 A unit rotary switch	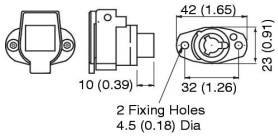	440T-ASCBE11x [1]
	Stainless-steel replacement code barrel with dust cap[2]	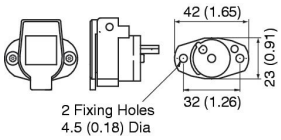	440T-ASCBE14x [1]
	Emergency break glass key box	Plastic case	440T-AIPB11
		Metal case with hammer	440T-AIPB12
	Emergency repair kit for code barrels[2]	ER1	440T-AKITE45ER1
		ER2	440T-AKITE45ER2
		ER3	440T-AKITE45ER3
		ER4	440T-AKITE45ER4
		ER5	440T-AKITE45ER5
		ER6	440T-AKITE45ER6
		ER7	440T-AKITE45ER7
		ER8	440T-AKITE45ER8
		ER9	440T-AKITE45ER9

(1) Substitute the desired primary code for *x* (key not included). See Key Coding on page 124 for code selection.
(2) Not suitable for 440T-MRKSE14/440T-MRPSE14 OR 440T-MSGAU units.

442G Multifunctional Access Box

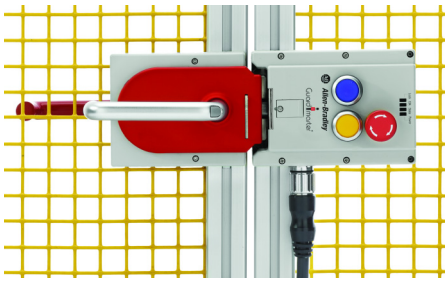

The multifunctional access boxes have the following features:

- High holding force 2000 N (Fzh per ISO 14119) for a wide range of guarding applications
- Unique RFID coded bolt actuator achieves the highest level of tamper-resistance
- Two models available: Power to Release and Power to Lock
- Available with up to four controls and indicators including an E-stop push button
- Optional escape release allows a person who is locked inside the safeguarded area to exit quickly and easily
- Four status indicators for local status and diagnostics
- Outputs for door position, bolt position, and lock status
- Two integrated hasps included to affix padlocks
- Can be operated as a standalone device or in series with other devices

Specifications

Attribute	442G Multifunctional Access Box
Safety ratings	
Standards	IEC 60947-5-3, EN ISO 13849-1, ISO 14119, UL 508 (evaluated for risks of electrical shock and fire; only suitable for NFPA 79 applications only)
Safety classification	Type 4 interlocking device with guard locking and high-coded RFID actuators according to ISO 14119
Functional safety data	PFH: 2.47 x 10^{-8}; PLe, Cat. 4 (according to ISO 13849-1). Mission time: 20 years. B10d for E-stop: 1.0 x 10^{5} cycles
Certifications	cULus (UL 508) Listed, UKCA Marked for all applicable regulations, CE Marked for all applicable EU directives rok.auto/certifications
Outputs	
Safety outputs (F01A/F01B)	Semiconductor outputs, PNP
Output current, max (each)	200 mA
Output voltage U_{F01A} / U_{F01B} [1] at 50 mA switching current	ON: U_B - 2V...U_B OFF: 0...1V DC
Monitoring Outputs	
Monitoring outputs (OD, OT, OL, OI)	P-switching and short circuit-proof
Output voltage	U_A - 2V...U_A
Maximum load (each)	50 mA, maximum
Controls and Indicators	
Operating voltage	5...24V DC
Operating current	1...100 mA
Breaking capacity, max	250 mW
Power supply status indicator	24V DC
Operating characteristics	
Torque settings, max [N•m (lb•in)]	• Lock module cover screws (6x): 1 (8.85) • Manual release locking screw: 0.5 (4.43) • Handle set screw (handle and escape release): 2 (17.7)
Locking force Fmax	2600 N (584.5 lbf)
Holding force Fzh	2000 N (449.6 lbf)
Impact energy withstands, max	300 J

Attribute	442G Multifunctional Access Box
Locking bolt alignment tolerance [mm (in.)]	Horizontal: ± 4 (0.16) Vertical: ± 5 (0.2)
Operating voltage U_B	Class 2 PELV 24V DC +10/-15% required
Auxiliary power U_A	Class 2 PELV 24V DC +10/-15% required
Protection type	Short circuit and reverse polarity protected, cross fault detection
Current consumption I_{UB} (no load on any outputs)	80 mA
Current Consumption I_{UA}	
With energized guard locking solenoid and unloaded outputs OI, OL, OT, and OD	350 mA
Push button (no load, per status indicator)	5 mA
External fuse	See Multifunctional Access Box with CIP Safety™ over EtherNet/IP™ User Manual, publication 442G-UM002
Response time (on)	570 ms
Risk time (per IEC 60947-5-3)	350 ms
Discrepancy time	10 ms (maximum)
Start-up time (availability)	0.5 s configured for standalone operation 8 s configured for series operation
Length of switch chain, max	10 MAB devices
Utilization category (IEC 60947-5-2)	DC-13 24V 200 mA
Insulation voltage U_i (IEC 60947-1)	30V
Impulse withstand voltage (U_{imp})	1.5 kV
Pollution degree (IEC 60947-1)	3
Manual release	Built in accordance with ISO 14119
Mechanical life	1,000,000 operations
Environmental	
Ambient temperature at U_B = DC 24V [°C (°F)]	-20...+55 (-4...+131)
Storage temperature [°C (°F)]	-20...+65 (-4...+149)
Enclosure rating	IP65
Operating humidity	5...80% relative
Vibration/shock	Resilience to vibration in accordance with EN IEC 60947-5-3

Attribute	442G Multifunctional Access Box
Physical Characteristics	
Weight	Lock module with cover 750 g (26.46 oz), handle assembly 1000 g (35.27 oz), escape release 500 g (17.64 oz)
Materials	Glass fiber reinforced plastic, nickel-plated die-cast zinc, anodized aluminum handle, stainless-steel hardware

Product Selection

Table 86 - Handle Assembly and Mounting Plate

	Type	Cat. No.
	Right handle (1)	442G-MABH-R
	Left handle (1)	442G-MABH-L
	Handle mounting plate (required)	442G-MABAMPH
	Lock module mounting plate (required)	442G-MABAMPL

(1) Sold separately.

Table 87 - Optional Escape Release (1)

	Type	Cat. No.
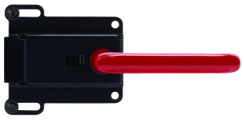	Escape release assembly with standard actuation shaft	442G-MABE1

(1) The standard shaft 115 mm (4.53 in.) is optimized for use on 40 mm (1.57 in.) and 45 mm (1.77 in.) profiles. An extended shaft is available for profiles larger than 45 mm (1.77 in.) (or when used with mounting plates on a 45 mm (1.77 in.) profile).

Table 88 - Accessories

	Type	Cat. No.
	Escape release extended shaft 250 mm (9.84 in.)	442G-MABASHFT
	Escape release mounting plate	442G-MABAMPE
	19-pin M23 2 m (6.6 ft) cordset	889M-F19RM-2 (1)

(1) Other cordset lengths are available at https://www.rockwellautomation.com/en-us/products/hardware/allen-bradley/connection-devices/cables-and-cordsets/m23.html.

Table 89 - Lock Module

Guard Type	Connector		Right-hand Guards Cat. No. (1)		Left-hand Guards Cat. No. (1)
Power to Release	M23 (19-pin)	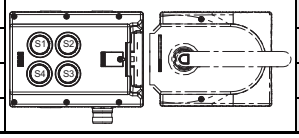	442G-MABR-URM-x	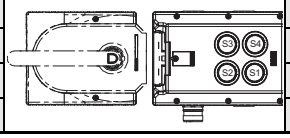	442G-MABR-ULM-x
	M20 cable entry		442G-MABR-UT-x		442G-MABR-UT-x
Power to Lock	M23 (19-pin)		442G-MABL-URM-x		442G-MABL-ULM-x
	M20 cable entry		442G-MABL-UT-x		442G-MABL-UT-x

(1) x = cover control code (C00...C04). See Table 90 on page 169.

Table 90 - Cover Control [1]

Description		Cover Control Code
Blank cover		C00
One illuminated push button		C01
Two illuminated push buttons		C02
E-stop with two illuminated push buttons		C03
E-stop with three illuminated push buttons		C04
E-stop only		C05

(1) All models are supplied with a colored lens kit, including one each of blue, green, red, and yellow, and two white.

Approximate Dimensions

Figure 187 - 442G-MAB [mm (in.)]

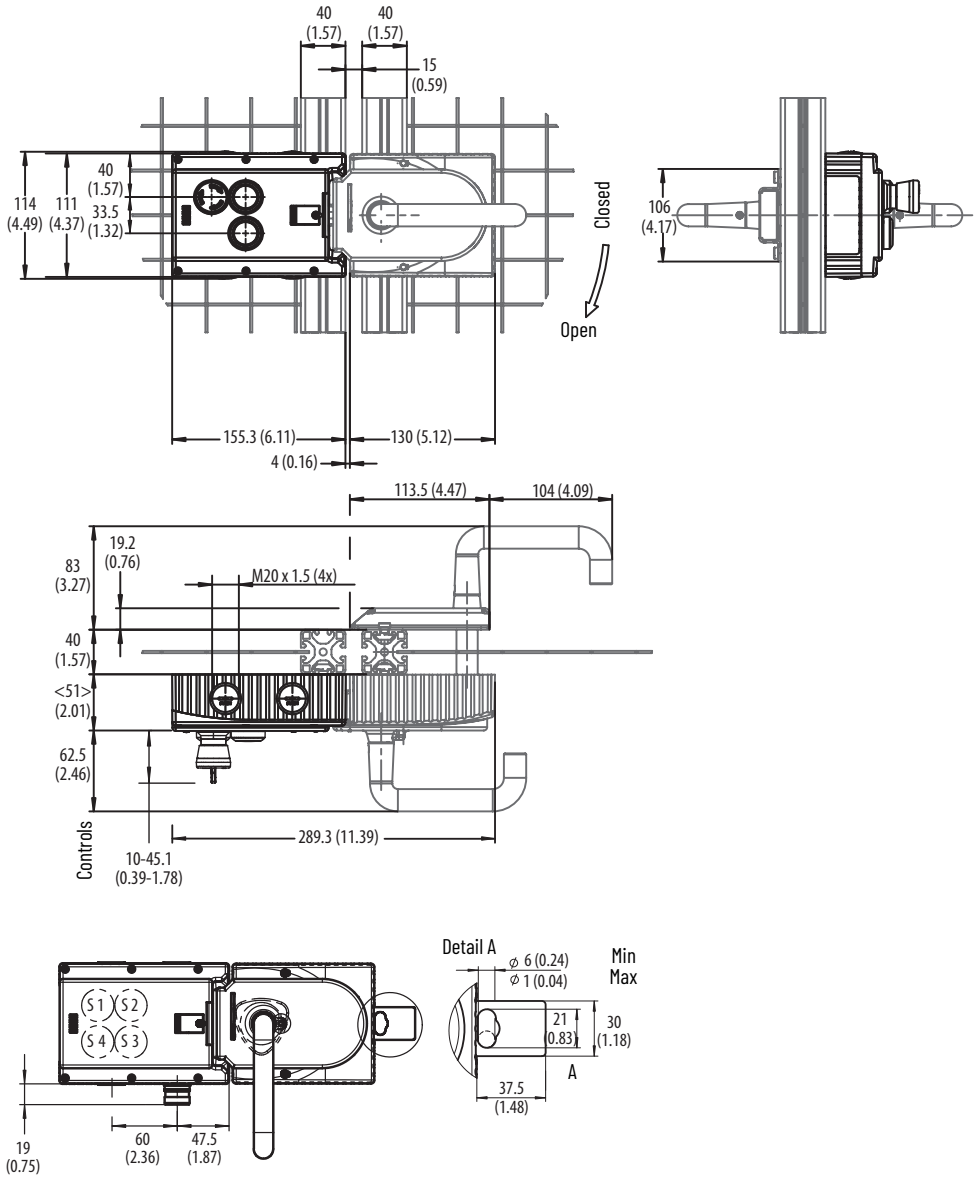

442G Multi-functional Access Box with CIP Safety

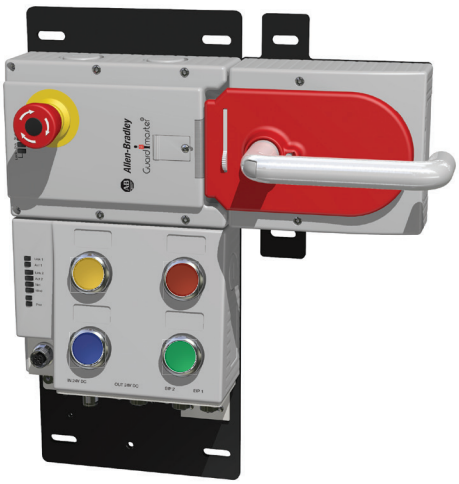

The multi-functional access boxes with CIP Safety™ have the following feature:

- EtherNet/IP™ connection saves time and money compared to wiring the standard device
- Easy integration with an Add-on Profile in Studio 5000 Logix Designer® application
- Supports Device Level Ring (DLR) network topologies to help increase network resiliency [(a)]
- Rated PLe, Cat 4 for interlocking, guard lock monitoring and control of guard locking
- Unique RFID coded bolt actuator achieves the highest level of tamper-resistance in accordance with ISO 14119
- High holding force 2000 N (Fzh per ISO 14119) is suitable for a wide range of guarding applications
- Two models available: Power to Release and Power to Lock
- Versions available with an integrated emergency stop push button and connector for attaching an enabling switch
- Integrated push buttons for reset, request to unlock, start/stop
- Four status indicators for local status and diagnostics
- Optional escape release allows a person who is locked inside the safeguarded area to exit quickly and easily
- Two integrated hasps included to affix padlocks

(a) The multi-functional access box currently does not support CIP Sync™, including CIP Motion™ applications. It must not be connected to a DLR network that contains multi-cast I/O devices.

Specifications

Attribute	442G Multi-functional Access Box with CIP Safety		
Standards	IEC 60947-5-3, EN ISO 13849-1, ISO 14119, UL 508 (evaluated for risks of electrical shock and fire; only suitable for NFPA 79 applications)		
Safety classification	Type 4 interlocking module with guard locking and high-coded RFID actuators according to ISO 14119		
Functional safety data	PLe, Cat. 4 (according to ISO 13849-1, SIL CL 3 according to IEC 62061 and IEC 61508)		
	$MTTF_d$	Monitoring of guard locking	746 years
		Control of guard locking	475 years
		Evaluation of emergency stop	787 years
		Evaluation of enabling switch	753 years
	PFH	Monitoring of guard locking	3.37×10^{-9}
		Control of guard locking	4.91×10^{-9}
		Evaluation of emergency stop	3.05×10^{-9}
		Evaluation of enabling switch	3.05×10^{-9}
	$B10_d$	Emergency stop	1.0×10^{5}
		Enabling switch	According to manufacturer specifications
	Mission time	20 years	
Certifications	cULus (UL 508) Listed, CE Marked for all applicable EU directives, UKCA Marked for all applicable regulations rok.auto/certifications		
Safety outputs	CIP Safety		
Torque settings, max [N•m (lb•in)]	• 1 (8.85) lock module cover screws (6x) • 0.5 (4.42) manual release locking screw • 2 (17.70) handle set screw (handle and escape release)		
Holding force Fzh (ISO 14119)	2000 N		
Locking bolt alignment tolerance [mm (in.)]	Horizontal: ± 4 (0.16); Vertical: ± 5 (0.2)		
Operating voltage	Class 2 PELV 24V DC +10/-15% required (1)		
EMC protection requirements	In accordance with EN 61000-4 and DIN EN 61326-3-1		
Current consumption, max	500 mA		
Operating current, max	4 A		
External fuse	1 A (min), slow-blow		
Risk time (2) (per IEC 60947-5-3)2	• E-stop: 100 ms • Enabling switch: 100 ms • Guard position: 250 ms • Bolt position: 250 ms • Guard locking: 250 ms		
Switching frequency, max	1 Hz		
Insulation voltage U_i (IEC 60947-1)	75V		
Impulse withstand voltage (U_{imp})	0.5 kV		
Pollution degree (IEC 60947-1)	3		
Manual release	Built in (ISO 14119)		
Mechanical life	1,000,000 operations		
Ambient temperature at UB = DC 24V [°C (°F)]	-20...+55 (-4...+131)		
Storage temperature [°C (°F)]	-20...+65 (-4...+149)		
Enclosure rating	IP54		
Operating humidity	5...80% relative		
Vibration/shock	IEC 60068-2-27 30 g, 11 ms/IEC 60068-2-6 10...55 Hz		
Weight	• Lock/bus assembly on mounting plate: 3.6 kg (7.9 lb) • Handle assembly on mounting plate: 1.2 kg (2.6 lb) • Escape release: 500 g (17.6 oz)		
Materials	• Glass fiber reinforced plastic • Nickel-plated die-cast zinc • Anodized aluminum handle • Stainless steel • Powder-coated sheet steel		

(1) See Multifunctional Access Box with CIP Safety over EtherNet/IP Installation Instructions, publication 442G-IN004.
(2) The risk time is the maximum difference between the time the input status changes and the time the corresponding bit in the input assembly is turned on.

Product Selection

Table 91 - Handle Assembly and Mounting Plate

	Type	Cat. No.
	Right handle (1)	442G-MABH-R
	Left handle (1)	442G-MABH-L
	Handle mounting plate (required)	442G-MABAMPH

(1) Sold separately.

Table 92 - Optional Escape Release (1)

	Type	Cat. No.
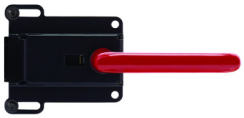	Escape release assembly with standard actuation shaft	442G-MABE1

(1) The standard shaft 115 mm (4.53 in.) is optimized for use on 40 mm (1.57 in.) and 45 mm (1.77 in.) profiles. An extended shaft is available for profiles larger than 45 mm (1.77 in.) (or when used with mounting plates on a 45 mm (1.77 in.) profile).

Table 93 - Access Box Accessories

	Type	Cat. No.
	Escape release extended shaft 250 mm (9.84 in.)	442G-MABASHFT
	Escape release mounting plate	442G-MABAMPE

Table 94 - Lock/bus Module [1]

Controls	Guard Type		Right-hand Guards Cat. No.		Left-hand Guards Cat. No.
Two push buttons	Power to Release	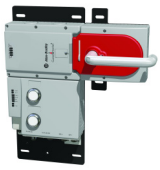	442G-MABRB-UR-P49		442G-MABRB-UL-P49
	Power to Lock		442G-MABLB-UR-P49		442G-MABLB-UL-P49
E-stop, two push buttons	Power to Release	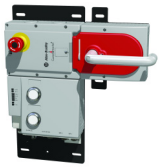	442G-MABRB-UR-EOP49	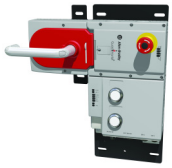	442G-MABRB-UL-EOP49
	Power to Lock		442G-MABLB-UR-EOP49		442G-MABLB-UL-EOP49
E-stop, four push buttons, enabling switch connector	Power to Release	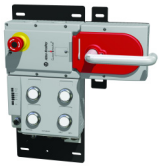	442G-MABRB-UR-EOJP4679		442G-MABRB-UL-EOJP4679
	Power to Lock		442G-MABLB-UR-EOJP4679		442G-MABLB-UL-EOJP4679

(1) All models are supplied with a colored lens kit, including one each of blue, green, red, and yellow, and two white.

Approximate Dimensions

Figure 188 - 442G-MAB [mm (in.)]

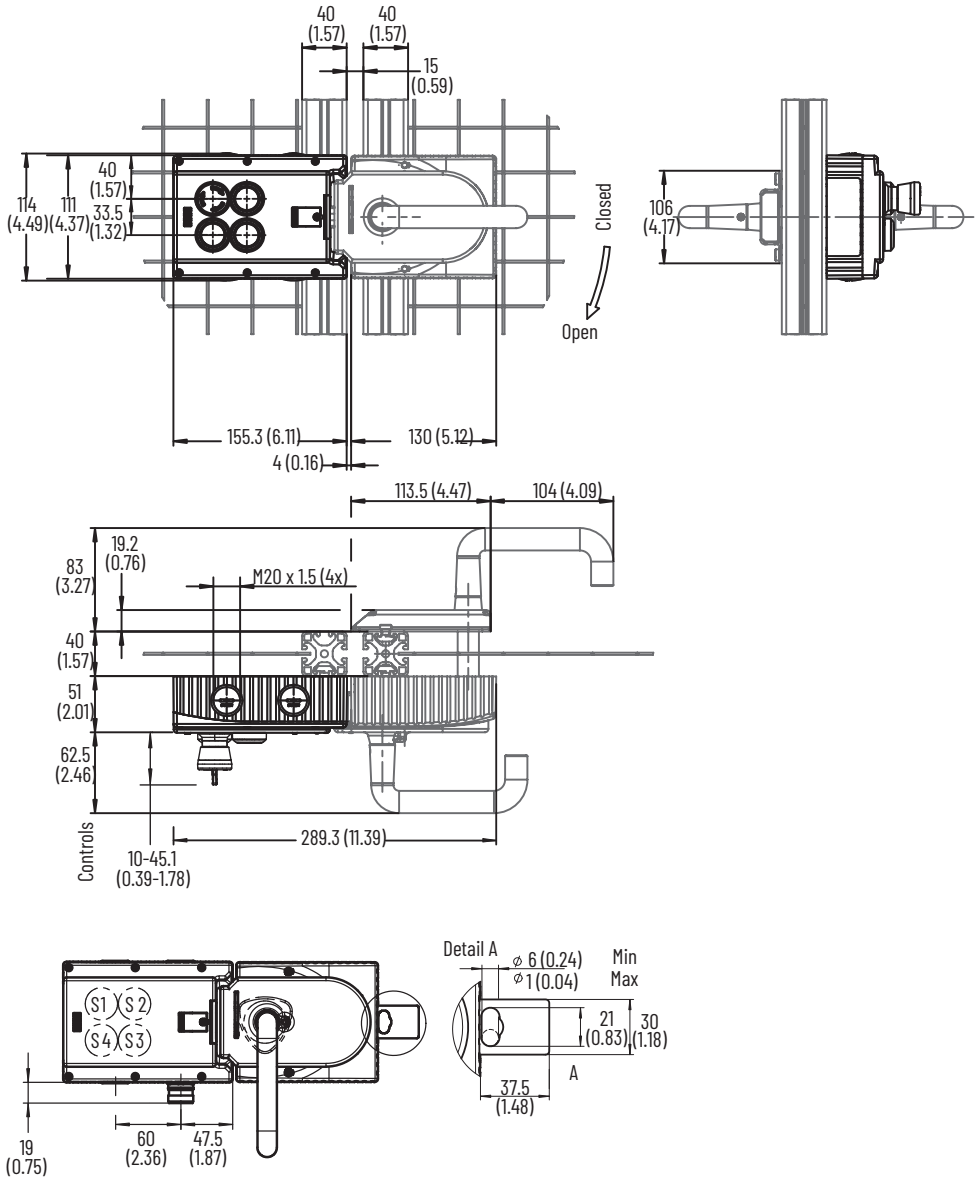

Notes:

Additional Resources

These documents contain additional information concerning related products from Rockwell Automation. You can view or download publications at rok.auto/literature.

Resource	Description
Technical Documentation Center, rok.auto/techdocs	Visit the following Technical Documentation Center pages to find product specifications, installation guides, user manuals, product certifications and more: • Hazardous Location Switches • Safety Interlock Switches • Trapped Key Safety Interlock Switches
Dynamix™ 1443 Series Sensors Product Information, publication 1443-PC001	Included with hazardous area rated sensors, provides basic environmental, ratings, and mounting information.
Dynamix 1443 Series Sensors User Manual, publication 1443-UM001	Provides complete information for mounting and cabling 1443 Series sensors.
Cordsets and Field Attachables Technical Data, publication 889-TD002	Provides an overview of cordsets and field attachables that Rockwell Automation provides.
Industrial Automation Wiring and Grounding Guidelines, publication 1770-4.1	Provides general guidelines for installing a Rockwell Automation industrial system.
Product Certifications website, rok.auto/certifications	Provides declarations of conformity, certificates, and other certification details.

Rockwell Automation Support

Use these resources to access support information.

Technical Support Center	Find help with how-to videos, FAQs, chat, user forums, and product notification updates.	rok.auto/support
Knowledgebase	Access Knowledgebase articles.	rok.auto/knowledgebase
Local Technical Support Phone Numbers	Locate the telephone number for your country.	rok.auto/phonesupport
Literature Library	Find installation instructions, manuals, brochures, and technical data publications.	rok.auto/literature
Product Compatibility and Download Center (PCDC)	Download firmware, associated files (such as AOP, EDS, and DTM), and access product release notes.	rok.auto/pcdc

Documentation Feedback

Your comments help us serve your documentation needs better. If you have any suggestions on how to improve our content, complete the form at rok.auto/docfeedback.

Rockwell Automation maintains current product environmental compliance information on its website at rok.auto/pec.

Rockwell Otomasyon Ticaret A.Ş. Kar Plaza İş Merkezi E Blok Kat:6 34752, İçerenköy, İstanbul, Tel: +90 (216) 5698400 EEE Yönetmeliğine Uygundur

Connect with us.

rockwellautomation.com — expanding **human possibility**®

AMERICAS: Rockwell Automation, 1201 South Second Street, Milwaukee, WI 53204-2496 USA, Tel: (1) 414.382.2000
EUROPE/MIDDLE EAST/AFRICA: Rockwell Automation NV, Pegasus Park, De Kleetlaan 12a, 1831 Diegem, Belgium, Tel: (32) 2663 0600
ASIA PACIFIC: Rockwell Automation SEA Pte Ltd, 2 Corporation Road, #04-05, Main Lobby, Corporation Place, Singapore 618494, Tel: (65) 6510 6608
UNITED KINGDOM: Rockwell Automation Ltd., Pitfield, Kiln Farm, Milton Keynes, MK11 3DR, United Kingdom, Tel: (44)(1908) 838-800

Publication SWITCH-TD001G-EN-P - October 2024
Supersedes Publication SWITCH-TD001F-EN-P - May 2024